Quality
Made in
Germany

Sawing

MARTIN

Turning vague ideas
into precise cuts

ConnectControl
Technology

The MARTIN sliding table saw – the centrepiece of every workshop.

Are you one of those professionals who not only loves wood as a material, but also the absolute precision with which it can be processed? It is precisely for people like you who place such a special demand on their craft that we build innovative and absolutely reliable sliding table saws. So that they can turn their vision into reality. With millimetre precision.

In addition to the high-quality basic equipment, MARTIN sliding table saws also offer numerous useful and partly patented options.

You can conveniently configure your MARTIN sliding table saw according to your individual needs online at **www.martin.info**

Specifications	6
T66	8
T77	10
ConnectControl	12
T66 | T77 options	30
Dimensional sketches	54

MARTIN.
Precision-made in Germany.

MARTIN has been manufacturing machines in Germany for over 100 years. We only work with high-quality materials and components. All of the crucial components of our machines are produced at our in-house state-of-the-art production facilities in Ottobeuren (Germany) by well-trained, motivated employees. No MARTIN sliding table saw leaves our plant before it has undergone the strictest quality controls. In addition, thanks to our well-respected and efficient brand suppliers, we guarantee high flexibility during production, perfect adaptability to current requirements and first-class quality of all purchased components. Read on and find out for yourself!

Masterpieces crafted
from over 100 years of experience

T66

T66: the compact all-rounder.

Versatile machines to meet modern requirements.

The T66 sliding table saw is also known as the “T77’s little sister”. This machine, with its saw blade that tilts to one side, is the ideal point of entry into the MARTIN world of sawing, and will win you over with its practical advantages for your daily work. For example, the T66 is equipped with a powerful, continuously adjustable rotational speed control where others still have to change the belt in the machine frame.

With the MARTIN innovative **ConnectControl** operating concept, you can benefit from all the advantages of digitalisation in your company. The sliding table, which has been tried and tested for decades, also guarantees outstanding cutting results. Thanks to the individual customisation options, you can upgrade the T66 according to your own special requirements.

Configure your T66.

T77

T77: Premium class precision.

A masterpiece made by professionals for professionals.

This machine is characterised by innovative control system technology in combination with robust engineering. A motor rating of up to 15 kW is available as an option. You can decide whether to equip the T77 with a saw blade that tilts to one side, or to both sides. Your machine's controls can be integrated into your company's digitally networked system via the MARTIN **ConnectControl** operating system.
High-quality, state-of-the-art additional options are also available for the T77: from electromotive positioning of the rip fence to the 3-axis scoring saw. From the **RadioCompens** angle cutting system to the **VacuSlide** vacuum clamping system. Whether you are processing wood materials, solid wood, plastics or aluminium – the T77 is your prime partner. For results with maximum precision.

Configure your T77.

Specifications	T66	T77
Motor rating optional	4.0 kW 5.5 | 7.5 kW	5.5 kW 7.5 | 11.0 kW
Saw-blade diameter max. optional	450 mm —	450 mm 550 mm
Cutting height max. optional max.	155 mm ± 45°: 110 mm —	155 mm 1 × 45° machine: +45°: 106 mm 2 × 45° machine: +45°: 104 mm 2 × 45° machine: -45°: 88 mm 205 mm 1 × 45° machine: +45°: 141 mm 2 × 45° machine: +45°: 144 mm 2 × 45° machine: -45°: 123 mm
Saw blade tilting optional	0° to +46° —	0° to +47° -46° to +47°
Rotational speed	cont. rotational speed control 1,000 – 5,000 rpm	cont. rotational speed control 1,000 – 5,000 rpm
Main saw blade change	ProLock	ProLock
Cutting thickness (1x 45°) optional (2x 45°)	max. 5 mm | special tools up to 15 mm (0°) —	max. 5 mm | special tools up to 20 mm (0°) max. 6 mm
Cutting width optional	850 mm 1,350 mm	850 mm 1,100 | 1,350 | 1,600 mm
Sliding-table length optional	3.0 m 1.9 | 3.3 | 3.7 m	3.0 m 1.9 | 2.5 | 3.3 | 3.7 | 4.3 | 5.1 m
Control system optional	7” touch screen 11” iPad	7” touch screen 12.9” iPad
Display resolution	0.1 mm | 0.1°	0.1 mm | 0.01°
Control panel	at eye level	at eye level, rotatable
Cutting angle/height	controlled	controlled
Cutting width optional	manually, by scale with fine adjustment	manually, by scale with fine adjustment
Extraction connection	120 mm on frame | 80 mm on guard	120 mm on frame | 80 mm on guard
Weight	approx. 1,100 – 1,400 kg	approx. 1,600 – 2,200 kg

Dimensions and specifications are subject to technical innovation and may change without prior notice. Illustrations may differ from the original. Please refer to the valid price list for binding technical features and equipment.

T66

T66

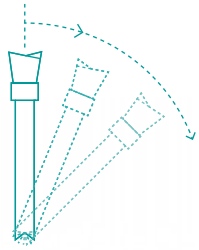

Saw blade tilting
to one side

Plenty of performance in a small space.

Quietly running saw blade. Precisely running sliding table. Easy to operate rip fence. The new T66 offers you all this – and more.

With the new MARTIN T66, we have developed a real all-rounder which combines all the advantages of the large machines – at a fair price. For example, the 7” touchscreen and the state-of-the-art **SynchroDrive** drive technology. This high-quality technological equipment makes the T66 very efficient and versatile.

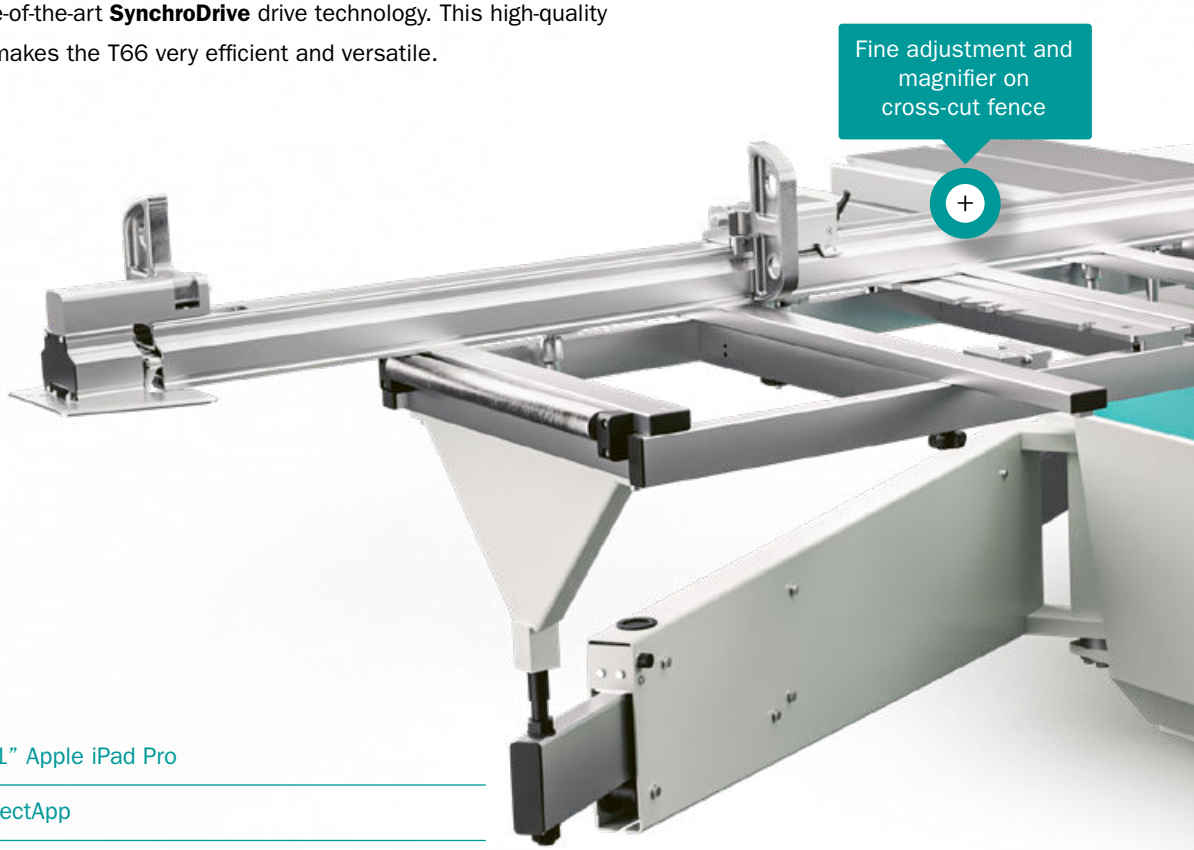

Configure
your T66.

T66 with accessories

T6604/1	ConnectPad 11” Apple iPad Pro
T6606/1	CLASSIC ConnectApp
T6615/2	Motor rating 5.5 kW
T6630/3	Sliding-table length 3.0 m
T6635/3	Cutting width 1,350 mm
T6641	Rip fence, moved by hand wheel
T6652	Electrically adjustable 2-axis scoring-saw unit
T6660/1	Standard cross-cut table for angle cuts, mitre cuts
T6673/1	PREMIUM analogue cross-cut fence with continuous support
T6681/1	Front support table, foldable

ConnectControl: digital and brilliant.
With **ConnectControl**, not only do you have an extremely powerful control system on board. You can also integrate the machine into the digital workflow of your business, and reap all the efficiency benefits of networked communication. Every single day.

Hand wheel for positioning the rip fence.
With the optional hand wheel adjustment, you can conveniently control the fence jaw on the T66 from the operating position. For even greater operating convenience, simply choose the electronically controlled rip fence.

T77

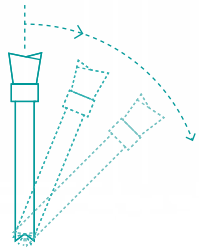

Saw blade tilting
to one side

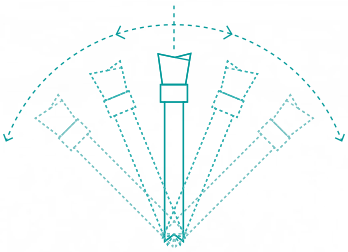

Saw blade tilting
to both sides

Uncompromising quality.

The new T77 is a masterpiece of technology. Even in the basic version, up to seven axes can be controlled digitally with ease. With innovative patented technologies, for example, the cutting speed can be precisely adapted to the requirements of any material or, depending on the choice, the saw blade can be tilted to one or both sides. What's more, the new, networked **ConnectControl** control system offers highly efficient Cloud-supported work across the board. The T77 also stands for exceptional robustness and extreme stability.
This premium class sliding table saw offers optimum conditions for tough daily use in trade and industry, and will inspire your workshop with its reliable, one-hundred-percent precision.

Configure
your T77.

T77 PreX with accessories

T7704/2	ConnectPad 12.9" Apple iPad Pro
T7706/2	PREMIUM ConnectApp
T7710/2	PreX saw unit
T7720/4	Motor rating 11.0 kW
T7725/2	Cutting height 205 mm
T7730/4	Sliding-table length 3.3 m
T7735/2	Cutting width 1,100 mm
T7742	Rip fence, electronically controlled
T7755	Electrically adjustable 3-axis scoring-saw unit
T7757	SafeLight scorer light
T7775/1	RadioCompens angle cutting system
T7781/1	Front support table, foldable
T7792/2	Sensor monitoring for laterally sliding guard 2x 45°

ConnectControl
control system
Cutting height 205 mm
DualDrive
swivel drive
Sliding table with
replaceable table lip
MARTIN
T77

ConnectControl system.

ConnectControl is the umbrella term for the patented control concept that characterises the latest generation of formatting saws and spindle moulders from MARTIN. With **ConnectControl**, you get a uniquely designed, highly-powerful control concept that not only opens up completely new horizons to you in terms of machine operation, but also offers you the entire world of modern data exchange.

Everything you need to know about the ConnectControl.

GERMAN DESIGN AWARD SPECIAL 2022

GERMAN INNOVATION AWARD '22 WINNER

ConnectControl
Technology

The sawing technology of tomorrow already exists today at MARTIN.

Innovative ConnectControl technology.

With the high-resolution 7” touchscreen **ConnectTouch** in a modern 16:9 format, every sliding table saw can be operated quickly, easily and efficiently on all motorised axes. The attractively designed user interface supports you when inputting all dimensions; all displays refer to the tool you have specified – always to the point.

With the **Connect**Pad and the **ConnectApp** that runs on it, you can get more electronic support on the machine at any time, even at a later date. This solution not only makes machine operation easier, but it also opens up all the possibilities of networking and Internet connection to you.

Supplemented by the **ConnectDrive** Cloud solution, all data exchange paths with other software solutions in your Production Planning system are available to you.

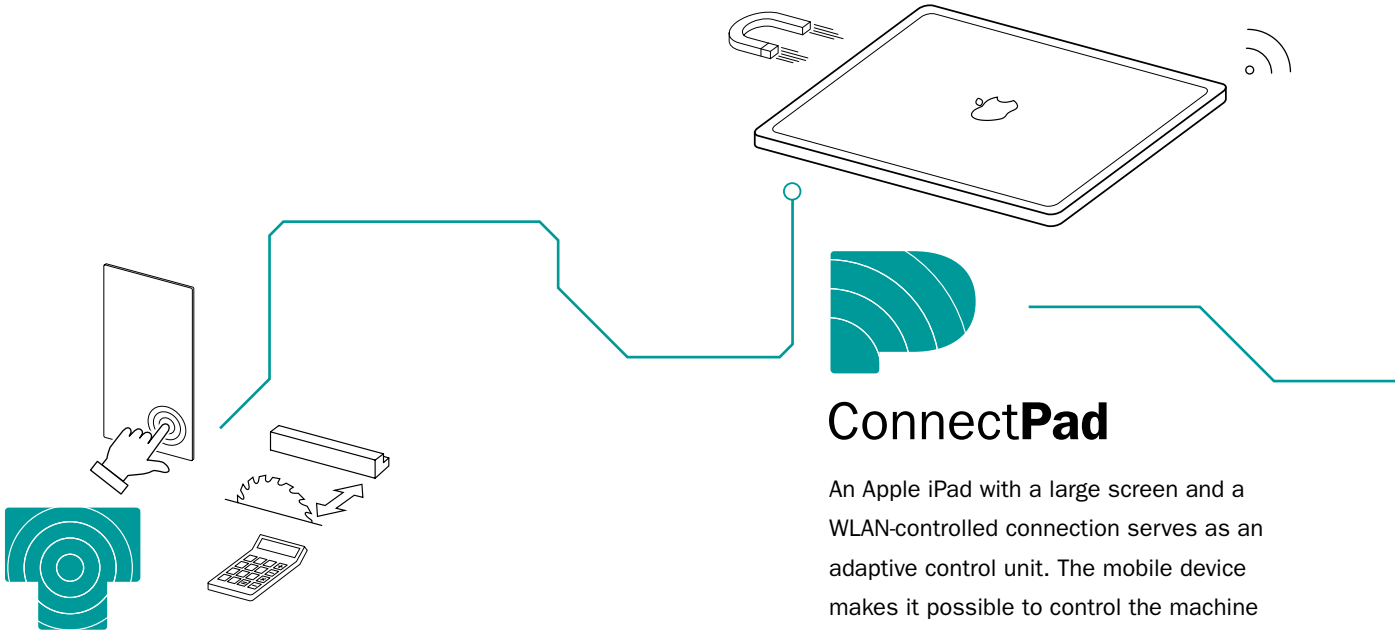

Connect**Pad**

An Apple iPad with a large screen and a WLAN-controlled connection serves as an adaptive control unit. The mobile device makes it possible to control the machine from any location.

Connect**Touch**

The permanently integrated, touch-sensitive console serves as the operating unit and can control all the machine’s functions.

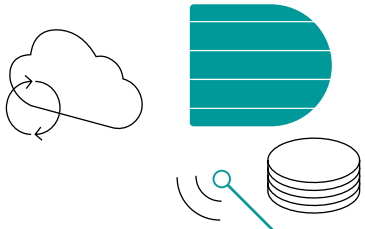

Connect**Drive**

Cloud-supported work provides the data base for controlling the machine and also for many advanced features – which are available anywhere and any time. For effective digital and mobile work.

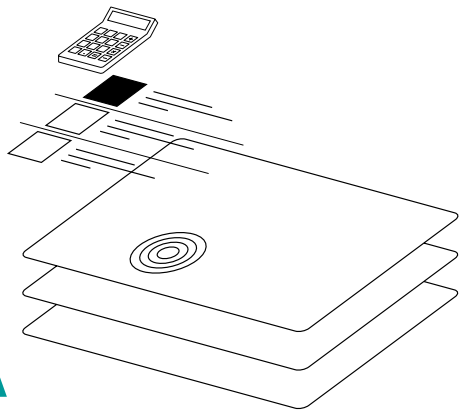

Connect**App**

Only with the **ConnectApp** can the full potential of Cloud-supported work processes be realised.
In addition to the machine controls, it also opens up a whole range of administrative functions and wizards to support you.

Watch the **ConnectControl** video.

ConnectPad expands your range of actions.

The 12.9- or 11-inch Apple iPad Pro is attached magnetically to the control panel and can also be used in mobile applications any time. Thanks to the wireless networking of machine and Cloud, remote access of wood-processing machines is now possible for the first time. You now have mobile access to project data which enables particularly flexible production planning.

Max Mustermann
MARTIN
T77
09:43:15
Werkzeug Suche
Zuletzt verwendet
Leuco LowNoise
Geräuscharm
Universal Leisten
Profile
Ø 150,0
Ø 180,0
Leuco Dünn
MDF
Leuco Gehrung
Kapp- und Gehrung
Leuco Kapp
Ø 350,0
MARTIN
3000 09:43 000 mm
Leitz 300
150,00
2,54
CLR
ESC

ConnectApp: intelligent sawing.

In addition to the clearly arranged machine controls on the large screen of the **ConnectPad**, additional functions can also be operated with the **ConnectApp** such as tool and order management or section planning.
Smart wizards also support carpenters in implementing special cuts such as tongue and groove cuts or tenoning.

Machine controls

Cutting lists

Order data management

User data

Remote maintenance

Cutting wizards

Max Mustermann
MARTIN
T77
09:43:15
Aufträge
Küche für Musterfirma
Treppenlauf Stadtwerke Vetbert
Platten Meisbach
Bunnigheim Theke
Regalsystem Schirmer
Bankauskleidung
Möbel Sekkert
Meldungen
Küche für Musterfirma
Spezialauftrag
Schnittplan eingelesen
Werte übernehmen
Werkzeuge
Leuco Dünn
Sprezial Messer
Leuco Löwe
Leitz Fräser
Leitz Kistina
Leuco Dünn
Leuco Gehrung
Leuco Kapo
167,36
175,82
11,00
21,54
21,54
mm
Filter
Typen
Usefr
4397 Kleiderschrank Metro
4397 Innenausbau Kreishaus Heu...
4397 Treppenlauf Stadtwerke V...
4397 Kistenmaterial
MFC18-TEAK 1400 x 400 x 50 1
MFC18-TEAK 1400 x 400 x 50 1
MFC18-TEAK 1400 x 400 x 50 1
MFC18-TEAK 1400 x 400 x 50 1
Schitz & Zapfe
iPad

Max Mustermann
MARTIN
T77
09:43:15
Werkzeug Suche
Zuletzt verwendet
Leitz Katana
CNC
Ø 350,0
Leuco LowNoise
Geräuscharm
Ø 150,0
Universal Leisten
Profile
Ø 180,0
Holzwerkstoffe
38
Leitz Faser
Faserwerkstoffe
Ø 350,0
Leitz Katana
CNC
Ø 150,0
Leuco Dünn
MDF
Ø 180,0
Leuco Gehrung
Kapp- und Gehrung
Ø 350,0
Leuco Kapp
Kapp- und Gehrung
Ø 150,0
MARTIN
3000 09:43 000 mm
Leitz 300
150,00
2,54
7 8 9 ÷ × ⌫
4 5 6 + − CLR
1 2 3 = ESC
0 , ±
0000,0 0000,0 0000,0 0000,0

Your workshop 4.0 can do that.

Every machine in your company can be quickly and easily networked with **ConnectControl**.
Additional machines can also be integrated into the system without any trouble. Individual models are already taken into account by the workshop's digital control system when planning a new project.
If multiple users are involved in a team, Cloud-supported control with multiple devices ensures very efficient collaboration.

The perfect basis for perfect work.

MARTIN machine frame – robust, solid and durable.

The T66 may appear lightweight and small but it still weighs in at a solid 1,100 kg. This sliding table saw owes its exceptional stability to its solid frame with its sheet steel construction. Its intelligent design ensures a heavy, robust and vibration-absorbing frame. It forms the perfect basis for the solid cast table plate, the precisely running sliding table and the robust saw unit – thus ensuring first-class work results.

The T77's machine frame is a stable, thick-walled composite structure of a type and perfection that is unique to MARTIN. This design was invented by Otto Martin and granted a utility model way back in the 1920s. Following 100 years of continuous improvements, this very simple yet ingenious principle of frame construction today is still used on the T77 today. The intelligent combination of the two materials, steel and concrete, creates a high-quality frame that is unparalleled in terms of stability, damping capacity and torsional rigidity. Any vibrations that occur are absorbed far more effectively than with welded constructions.

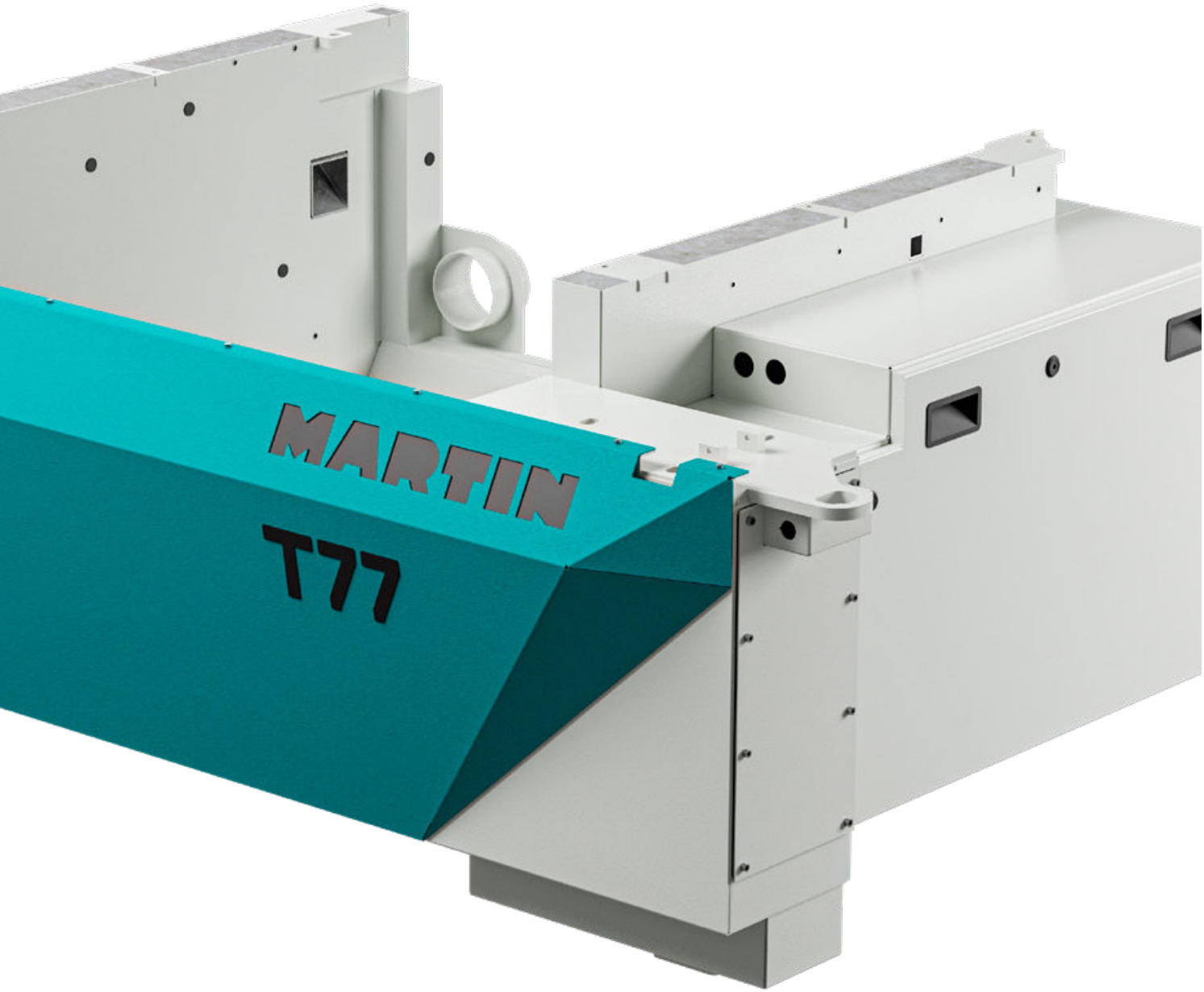
MARTIN
T77

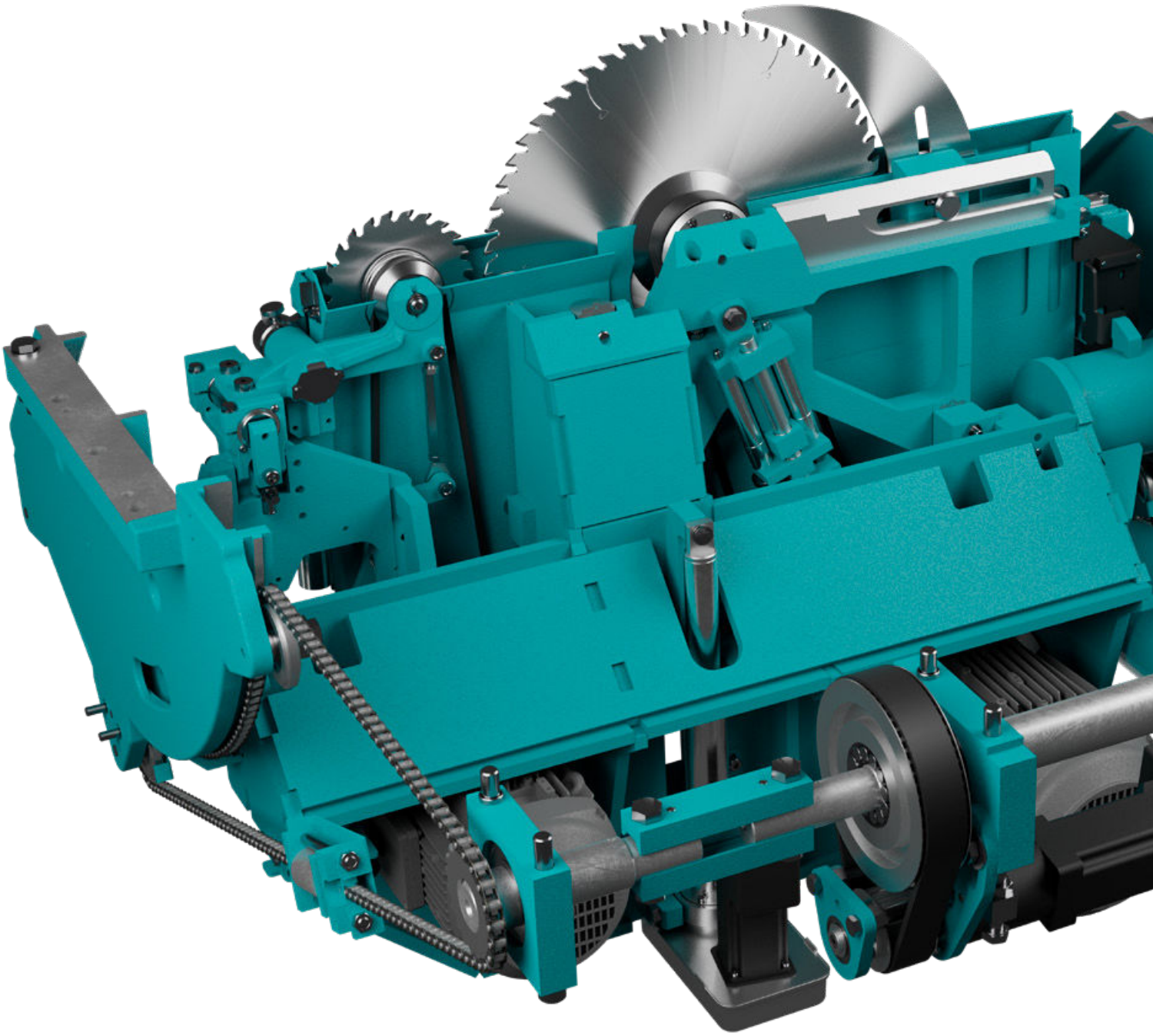

SynchroDrive: high performance for precise variability.

Our innovative drive technology for MARTIN sliding table saws: The continuously adjusted synchronous motors combine highest flexibility with exceptional performance. The motors also work in an extremely energy-efficient way. They achieve significantly higher torque than commercially available electric motors with the same power consumption. This guarantees that you will always be able to make a sufficiently powerful cut. Depending on the model, the standard motor power is 4.0 or 5.5 kW, and motor ratings of up to 11 kW are available. The rotational speed can be continuously adjusted from 1,000 to 5,000 rpm.

Configure the T77's power.

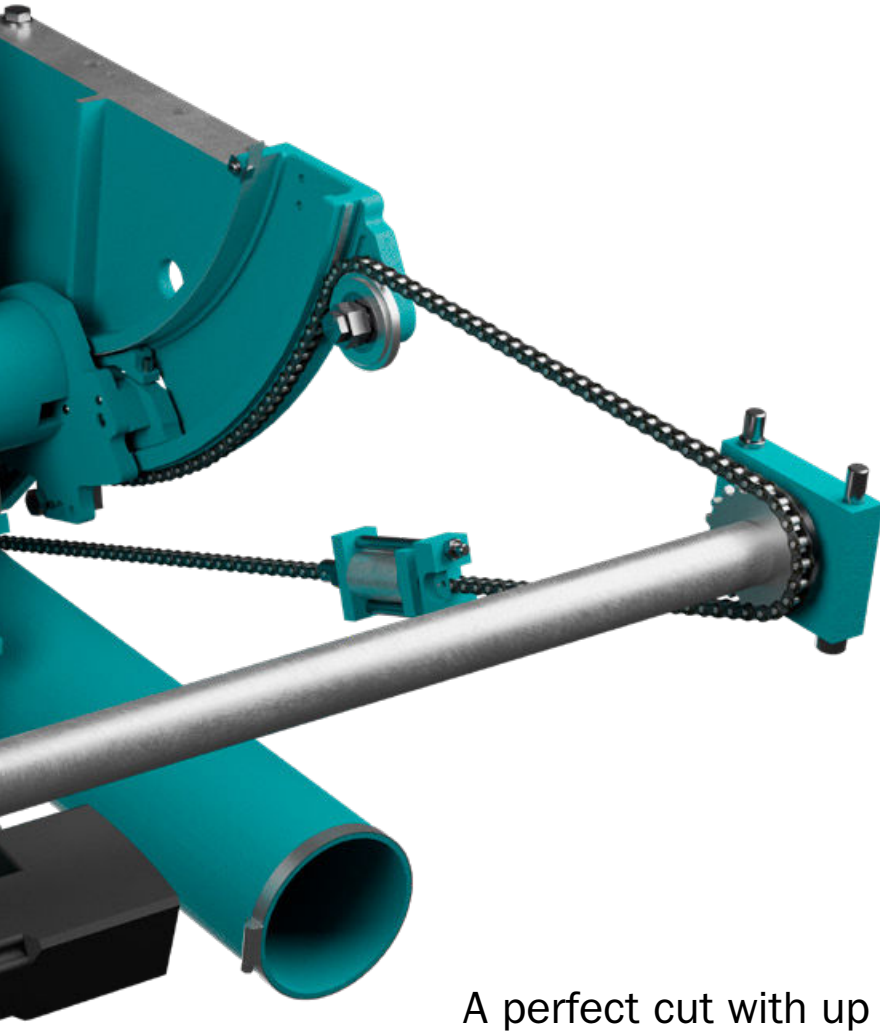

A perfect cut with up to 15 horsepower.

The units, which run on up to 15 hp, offer enough power for a wide range of sawing requirements. The T66 series machines are only available with a saw blade that tilts to the right up to +46°. With the T77 you have the choice between a saw blade that tilts to the right to +47° on one side, and a saw blade that tilts from -46° to +47° on both sides. The saw unit which tilts to both sides gives you the flexibility of a unique tilting angle. Combined with the enormous cutting height of up to 205 mm, you can cut even large cross-sections with extreme precision – exactly as the workpiece requires.

Unique DualDrive swivel drive.

Configure the T66's power.

This allows you to adjust the saw console over a tilting angle of 93° to 0.01°. Such extreme precision is achieved by two chain drives which are synchronously driven by a centrally positioned **CANBus** motor. This complex construction guarantees a precisely set saw blade and thus an absolutely perfect cutting result. A built-in sensor monitors the angle position and continuously compares the measured values with your specifications in the control system. Another advantage: The **DualDrive** system is completely resistant to dirt and wear and tear.

Sliding table: So that everything runs perfectly smoothly.

Since 1959, we have been using hardened steel guides for our sliding table saws and continuously enhancing this technology. The unbeatable advantage of the system is the absence of play combined with the permanently smooth and easy guidance of the table. The tempered running surfaces are also continuously lubricated with oil. This prevents dust and dirt from sticking permanently to the sliding surfaces. The movement of the table also ensures constant self-cleaning. As a matter of principle, we have dispensed with any plastic parts in the construction of the hardened steel guide, a component so important to cutting quality.

SafeDrive technology: Helping you travel better – and more safely.

The motorised rip fences of MARTIN sliding table saws complete the full travel distance without having to enter into a hold-to-run mode. This is made possible by the use of state-of-the-art motor and control technology, with which the movement of the rip fence is permanently monitored and controlled.

Depending on the equipment, the machine also recognises which guard is currently being used, and stops in time before a collision can occur. This gives you the opportunity to lift the guard to enable further travel. Travel along the rip fence can be continued by simply pressing the button again. The fence stops again just 5 mm before a collision with the saw blade. The button must then be pressed and held down in order to continue the travel.

T66
T77
Optio

ons

Operation & control

The innovative **ConnectControl** technology now brings more modern communication to your workshop. Thanks to the new operating system, you can now call up all data and information directly on your machine. Only MARTIN's new networked control system is able to do that.

The new high-resolution 7" **ConnectTouch** touch display allows you to control all motorised axes of the machine comfortably, quickly and efficiently. The attractively designed user interface supports you when making all settings, individually for each tool. This way, every setting is always quick and to the point.

Take it a step further. We offer you more mobility through a new cooperation with a real future: Used as a **ConnectPad** with the associated **ConnectApp**, an Apple iPad Pro provides even more extensive electronic support – at your new construction site, for example.

Both displays work together, synchronising tools, program data, work orders and so much more. Once online, through its connection with **ConnectDrive** – the MARTIN Cloud – the **ConnectPad** is the direct link to all order data from your Production Planning system, for example.
You can view or edit your data in real time, via a browser interface, on any Internet-capable terminal device. From your local system, you can, for example, transfer your order processing to the Cloud via interfaces, thus turning your machine into an intelligence beast.

The **ConnectPad** not only means that you can intuitively operate your MARTIN sliding table saw, but also, of course, that you have access to all the hardware and software possibilities that Apple offers with the iPad Pro and its apps. Customer emails, image data of the construction site, drawings of your workpieces or time recordings are always immediately available to you.

Do you use several sliding table saws in your workshop? If so, why not connect them together directly!

Control	T66	T77
7" (178 mm)	Standard	Standard
11" Apple iPad	T6604/1	—
12.9" Apple iPad	—	T7704/2
OtterBox Defender Case 11"	T6604/10	—
OtterBox Defender Case 12.9"	—	T7704/20
Document holder	T6605	T7705

ConnectApp	T66	T77
Classic operator level	T6606/1	T7706/1
Premium operator level	T6606/2	T7706/2

Control panel T66 | T77 | Standard

Control panel T66 | T77 with document holder | Txx05

Control panel T66 | T77 with Apple iPad 11” | T6604/1

Control panel T66 | T77 with Apple iPad 12.9” | T7704/2

Motor

Saw unit

The T66 series machines are only available with a saw blade that tilts to the right from 0° to +46°. With the T77, instead of the saw blade that tilts to one side from 0° to +47°, you can also optionally choose a saw blade that tilts to both sides from -46° to +47° – so you can just follow your inclinations.

Tilting range	T66	T77
0° to +46°	Standard	–
0° to +47°	–	T7710/1 | standard
-46° to +47°	–	T7710/2

Motor rating

SynchroDrive stands for the modern, new drive technology used in MARTIN sliding table saws. The continuously variable synchronous motors, specially manufactured to meet MARTIN's strict requirements, combine highest flexibility with powerful performance. Our motors have considerably higher power reserves than conventional electric motors with the same power consumption. The rotational speed can be continuously adjusted from 1,000 to 5,000 rpm. Depending on the model, the standard motor capacity is 4.0 or 5.5 kW. Motor ratings up to 11 kW are available.

Motor rating kW (hp)	T66	T77 (1x 45°)	T77 (2x 45°)
4.0 (5.5)	T6615/1 (standard)	–	–
5.5 (7.5)	T6615/2	T7715/2 (standard)	T7720/2 (standard)
7.5 (10)	T6615/3	T7715/3	T7720/3

Power supply

MARTIN machines need to be supplied with the appropriate power supply, depending on the area of the world in which they are used.

Special voltage 3 ~	T66	T77
400 V / 50 Hz	T66V_400 | standard	T77V_400 | standard

Sliding table

Sliding-table lengths

All MARTIN sliding table saws have been operating with tried and tested hardened steel guides for over 60 years. They ensure smooth and precise guidance of the table in the long-term. The special design ensures that the table's sliding surfaces move accurately both laterally and vertically. So that whether the saw blade is tilted to the right or left, the cuts are absolutely precise. Incidentally, on MARTIN sliding table saws, the sliding-table length also always corresponds exactly to the cutting length.

Sliding-table length in m	T66	T77
1.9	T6630/1	T7730/1
2.5	–	T7730/2
3.0	T6630/3 | standard	T7730/3 | standard
3.3	T6630/4	T7730/4
3.7	T7730/5	T7730/5
4.3	–	T7730/6
4.3 – 5.1	–	T7730/7

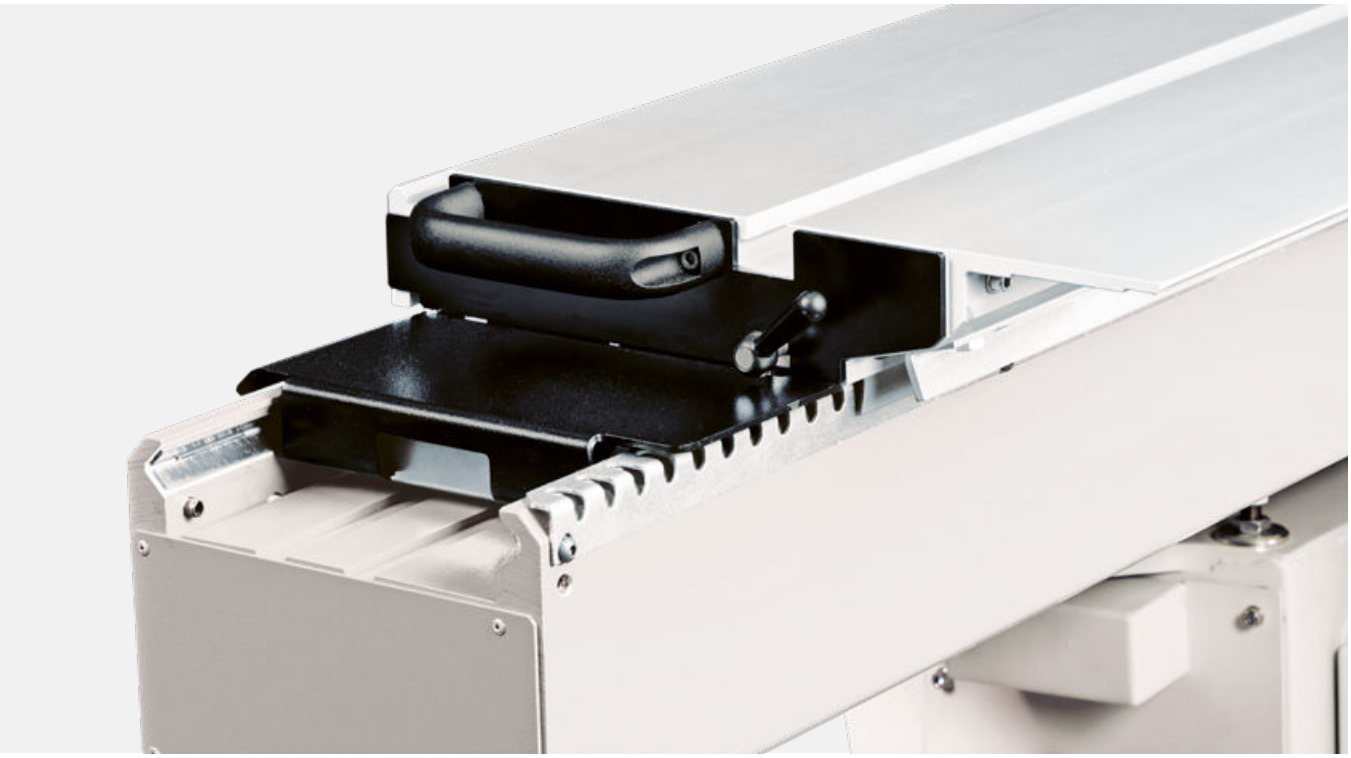

T66 | T77 sliding table

Cutting heights

Depending on the model, the maximum achievable cutting heights vary between 155 and 205 mm. The saw-blade diameters required for this are between 450 and 550 mm. This gives you the opportunity to specify this important machine feature exactly according to your needs.

Cutting height in mm	T66	T77
max. 155 | ø 450	Standard	T7725/1 | standard
max. 205 | ø 550	–	T7725/2

Guard T66 | standard

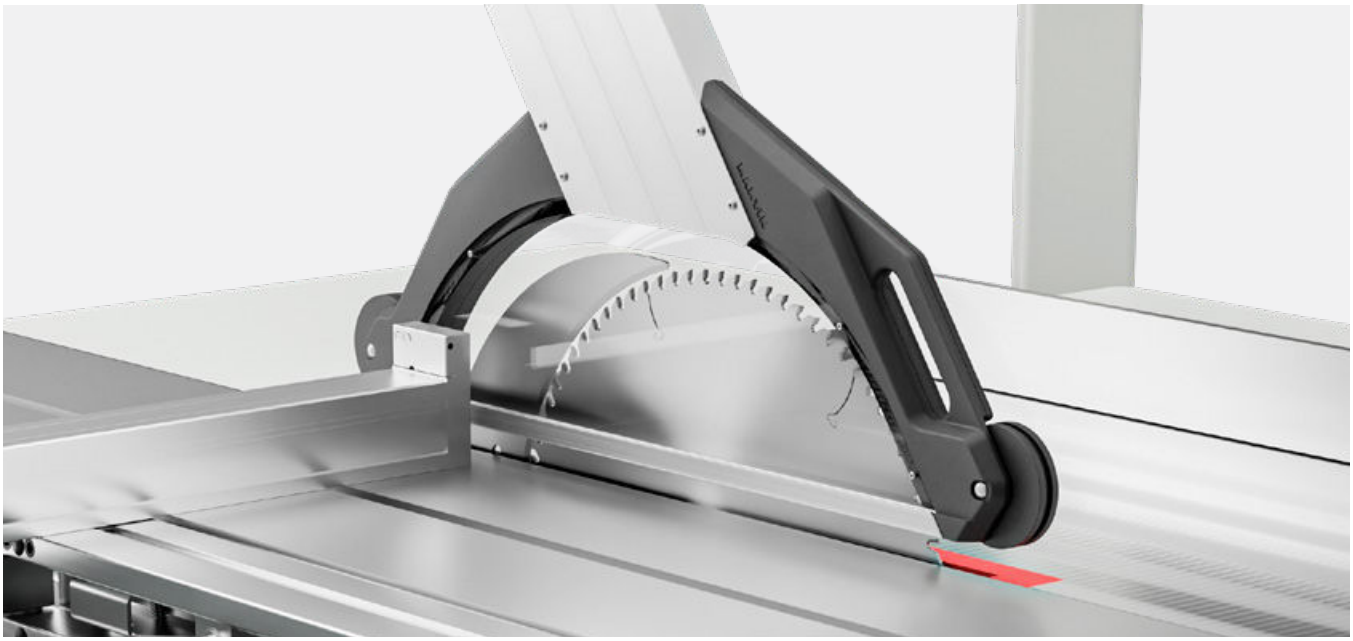

Guard T77 | standard

Cutting widths

The standard cutting width of MARTIN sliding table saws is 850 mm. Depending on the machine, this can be extended to up to 1,600 mm. The table extensions are very stable and designed to withstand extremely heavy loads.

Cutting width in mm	T66	T77
850	T6635/1 | standard	T7735/1 | standard
1,100	–	T7735/2
1,350	T6635/3	T7735/3
1,600	–	T7735/4

T66 rip fence with 1,350 mm cutting width | T6635/3

T77 rip fence T7743 with 1,100 mm cutting width | T7735/2

Rip fences

A manually adjusted rip fence forms part of the basic equipment on all of our sliding table saws. Easy settings according to scale and precise fine adjustment, as standard, enable you to make accurate cuts. When designing these machines, we deliberately dispensed with a simple round rod guide. Instead, the fence is guided in a high-quality and precise manner by four strong deep-groove ball bearings, and the guide moves freely across the table without support. If, for example, you wish to saw long workpieces, you can fold the fence down below table level at its outer end position, with a quick and easy movement.

As an option, you can also display the cutting dimensions digitally on the control panel. The electronic measuring system operates with a resolution of 0.1 mm and allows you to cut precisely to the point, even and especially with recurring cutting widths. When changing the fence rails to the vertical or flat position, you can switch the dimension display by simply pressing a button on the display.

Thanks to the optional hand wheel, the cutting dimension can be adjusted across the full cutting width from your operator station. When doing so, the digital dimension display on the control panel ensures the necessary accuracy of your settings.

Electromotive positioning of the rip fence.
On the T66, the electromotive positioning of the rip fence quickly and precisely processes the specifications you have made in the control system. Thanks to the innovative MARTIN **SafeDrive** drive technology, the rip fence completes the full travel distance without having to enter into a hold-to-run mode. This significantly increases the efficiency of this option. In the danger zone, which the machine detects automatically, the fence moves more slowly for your safety. Manual displacement is not possible with this fence design. This version of the rip fence is also available for the T77.

Electromotive positioning of the rip fence is only available for the T77 and can be easily operated both by motor and by hand. It does not fold down into its final position — you lower it yourself. Optionally, you can even do this remotely from the operating position. Of course, this fence also operates with MARTIN **SafeDrive** technology.

If you require a much longer guide for your workpieces, you can opt for the fence profile with a special length of 2.0 m. Either instead of the standard fence, or as an additional guide.

Rip fence	T66	T77
Rip fence, adjustable by hand	T6640 | standard	T7740 | standard
Digital display of cutting width	T6640/1	T7740/1
Hand wheel	T6641	T7741
Electromotive positioning, foldable	T6642	T7742
Electromotive positioning, lowerable	—	T7743
Rip fence pneumatically lowerable	—	T7743/1
Fence plate 2.0 m, replacement	T6645/1	T7745/1
Fence plate 2.0 m, additional	T6645/2	T7745/2

Rip fence T66 | T77, moved manually to scale

Rip fence T66 | T77 with digital dimension display | Txx40/1

Rip fence T66 | T77 with hand wheel | Txx41

Rip fence T66 | T77, driven by motor, foldable | Txx42

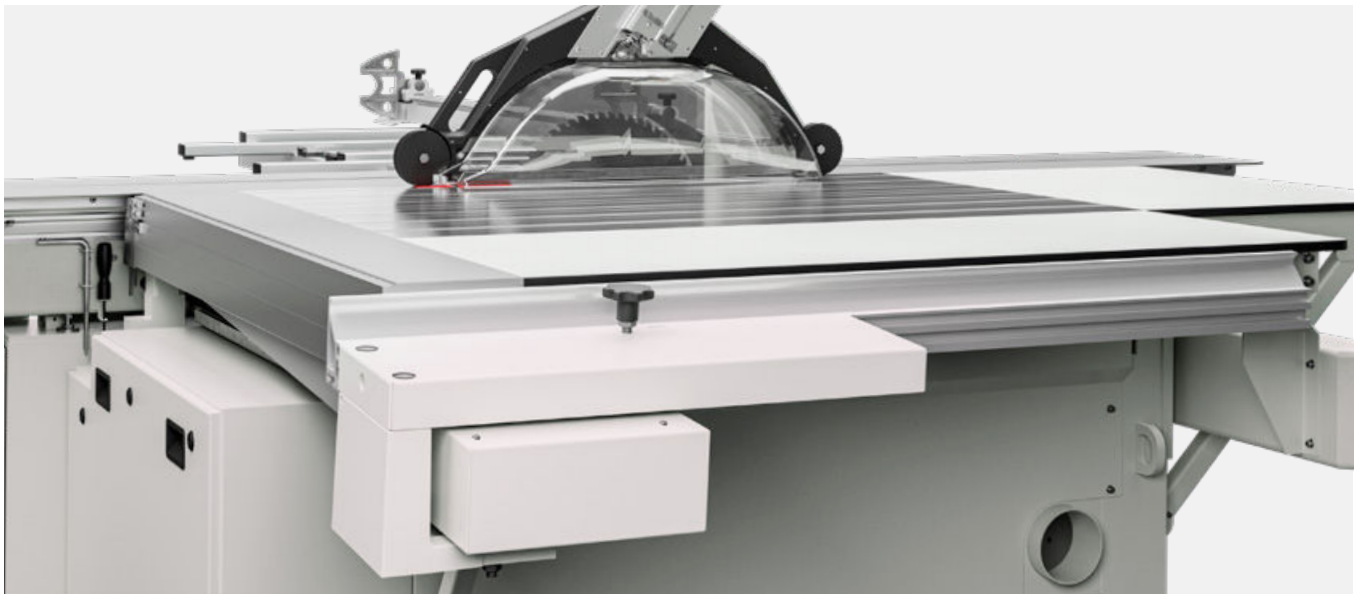

Rip fence T77, electronically controlled and lowerable into end position | T7743

Scoring saws

All models of MARTIN sliding table saws can be delivered with optional scoring-saw units. 2 and 3-axis systems are available to choose from, depending on the model. Perhaps at the time of purchasing the machine, you are not yet ready to opt for a scoring-saw unit, but are toying with the idea of doing so later. In this case, we would make the electrical pre-equipment available for you. Then you can keep all your options open.

2-axis scoring saw, electrically adjustable (T66)
The electrically adjustable 2-axis system is characterised by its impressive operating convenience. Thanks to its intelligent integration into the control system, the system adjusts its left/right position fully automatically to the right cutting edge of the main saw blade used; you just have to specify the scoring height electronically. The system is pneumatically raised and lowered to the electronically set scoring height, quickly and easily. Only the scoring width needs to be adjusted when the machine is at a standstill, either traditionally with spacer disks or optionally with the **ScribeMaster.**

2-axis scoring saw, manually adjustable (T77)
This scoring saw is set on 2 axes quickly and easily by hand, but while the machine is in operation, via corresponding turning knobs. With these turning knobs, you define the scoring position and height; the scoring width is traditionally regulated with spacer disks or optionally with the **ScribeMaster**. The system is pneumatically raised and lowered to the mechanically set scoring height, quickly and easily. The scoring-saw unit can be used with main saw blades of up to 400 mm.
If you would like to use larger main saw blades, you can remove the complete scoring-saw package in seconds.

2-axis scoring saw, electrically adjustable (T77)
This electrically adjustable 2-axis system is also completely integrated into the control system, and this machine also fully automatically adjusts the left/right position to the right cutting edge of the main saw blade used in each case. You also enter the scoring height electronically on this version. The system is pneumatically raised and lowered to the electronically set scoring height, quickly and easily. Only the scoring width needs to be adjusted when the machine is at a standstill, either traditionally with spacer disks or optionally with the **ScribeMaster.** The scoring-saw unit can be used with main saw blades of up to 400 mm. If you would like to use larger main saw blades, you can remove the complete scoring-saw package in seconds.

3-axis scoring saw (T77)
Thanks to its complete integration into the control system, the 3-axis system offers previously unimaginable precision and extreme comfort. Once the unit has been referenced, the system adjusts fully automatically to each main saw blade used. All three axes – scoring height, scoring position, and scoring width – are positioned and monitored electronically without further input. The decisive advantage: all scorer settings relevant to the cutting quality are always undertaken quickly and precisely. Time-consuming test cuts can be almost completely omitted. The scoring-saw unit can be used with main saw blades of up to 400 mm. If you would like to use larger main saw blades, you can remove the complete scoring-saw package in seconds.

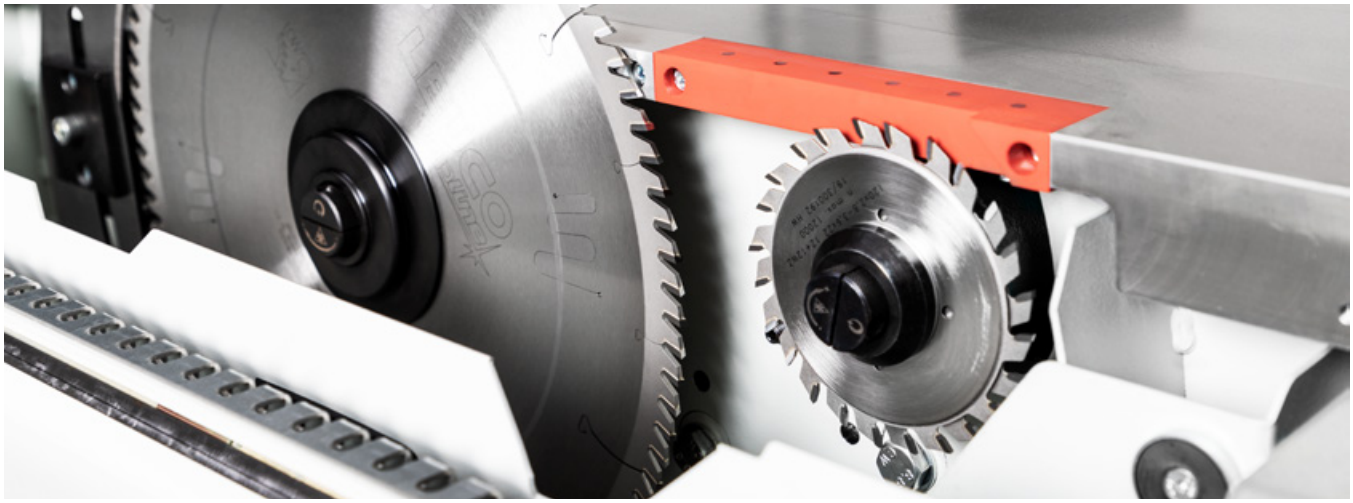

2-axis scorer T66 | T6652

ScribeMaster scoring-saw unit for 2-axis sawing-saw units

The system allows the scoring width for the 2-axis scoring units of the T66 and the T77 to be set easily when the saw blade is stationary. Compared to the classical approach, this method saves considerable time, as you no longer need to carry out time-consuming adjustment of the two-part scoring blades or fiddle around with spacer disks. The scoring saw's cutting width can be precisely and continuously adjusted to the main saw blade without having to disassemble anything.

SafeLight

The SafeLight scorer light highlights the danger zone during operation with a powerful light, thus optimising work safety.

Scoring saws	T66	T77
Electrical preparation for retrofitting	T6650	T7750
2-axis scoring-saw unit, mech. adjustable	—	T7751
2-axis scoring-saw unit, elec. adjustable	T6652	T7752
3-axis scoring-saw unit	—	T7755
ScribeMaster 120 scoring-saw system	T6653	–
ScribeMaster 140 scoring-saw system	–	T7753
SafeLight	T6657	T7757

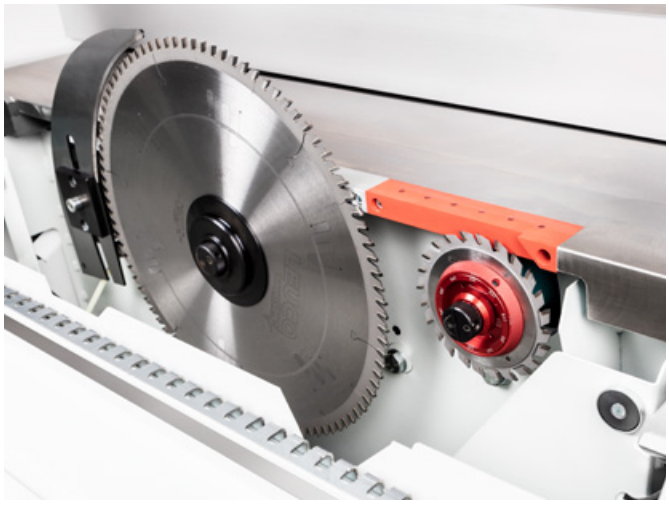

2-axis scorer T66 with ScribeMaster 120 | T6652 + T6653

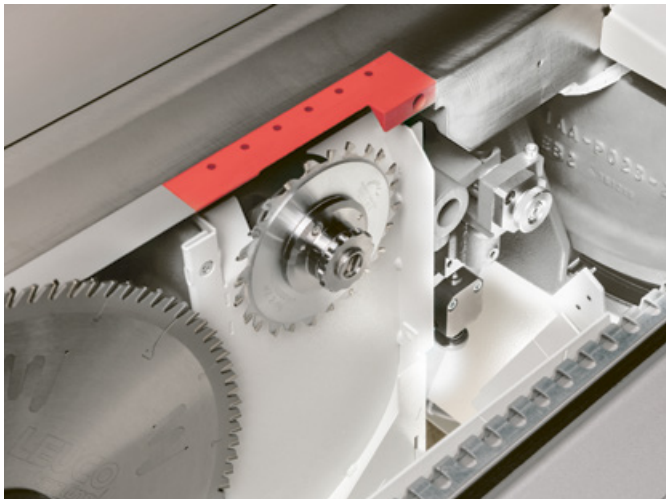

2-axis scorer T77, mechanically adjustable | T7751

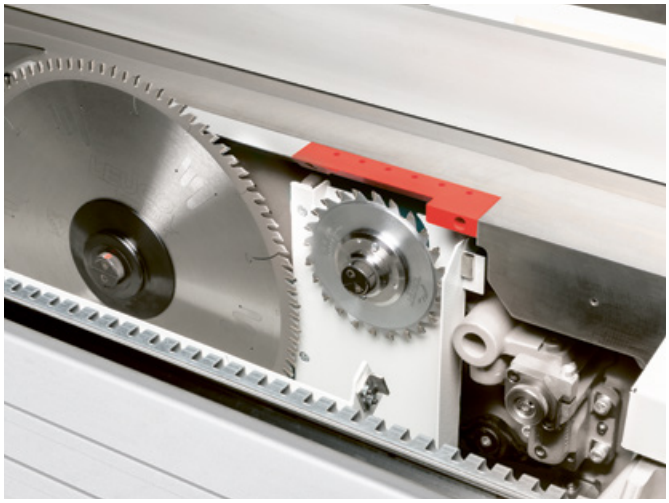

2-axis scorer T77, electrically adjustable, ScribeMaster 140 | T7752 + T7753

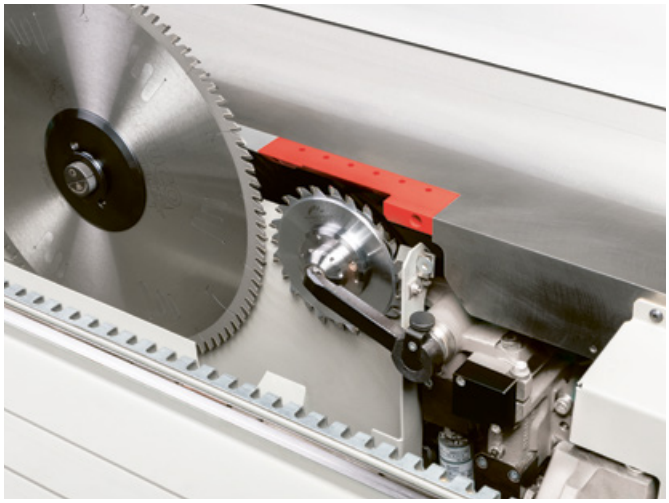

3-axis scorer T77, electrically adjustable | T7755

Cross-cut tables

Standard cross-cut table

The sturdy yet lightweight cross-cut table (despite its size of 1,400 x 700 mm) forms part of the basic equipment of all saws. It can be mounted over the entire length of the sliding table, and the clamping mechanism can be operated with one hand. The rollers facilitate the accommodation and removal of larger workpieces and prevent damage to the surface and edge. Two sliding bars give you the option of enlarging the support surface if required. The cross-cut fence can be pushed into the front or rear position without any need for lifting.

You can optionally turn the cross-cut fence according to scale by an angle of approx. ± 47°. Integrated mechanical length compensation also makes it easier to cut exact lengths. In addition, fixed settings enable cutting of popular angles 22.5°, 30° and 45°.

The extendable support, which is available on request, makes it easier to saw longer workpieces, and the roller, which is also available, protects the workpieces. If you process heavier workpieces, we recommend that you equip the cross-cut table with a roller support instead of a swivel arm. If you wish to use the full cutting length of a sliding table that is longer than 3.7 m, a cross-cut table on a roller support is absolutely necessary.

If you want to reliably support large workpieces, you should consider investing in a second cross-cut table with a roller support. You can also retrofit this second cross-cut table on the roller support at any time.

Mitre cross-cut table

The mitre cross-cut table from MARTIN has been setting benchmarks in flexibility and precision for over 60 years. Whether you wish to perform precise, tailor-made angle cuts or mitre cuts on large panels or small strips, the mitre cross-cut table offers the perfect support, precisely where you need it. You loosen the robust 0° lock in one simple step, and adjust the table in a range of ± 46° according to the LCD display. Thanks to the 3-part tilting arm, neither an obstructive cantilever structure nor an arm standing over the table have a negative effect on the quality of the cut. Please note that the mitre cross-cut table is only available with premium cross-cut fences. Extendable supports are also available as an option for the mitre cross-cut table.

For standard cross-cut tables	T66	T77
Standard cross-cut table, fixed	T6660 | standard	T7760 | standard
Standard cross-cut table, ± 47°	T6660/1	T7760/1
Extendable support	T6660/2	T7760/2
Roller support instead of swivel arm	T6663/1	T7763/1
Additional standard cross-cut table	T6662	T7762
Additional roller support	T6663/2	T7763/2
Mitre cross-cut table	T6665	T7765
Extendable support for mitre cross-cut table	T6665/1	T7765/1

Extendable support

Standard cross-cut table with roller support

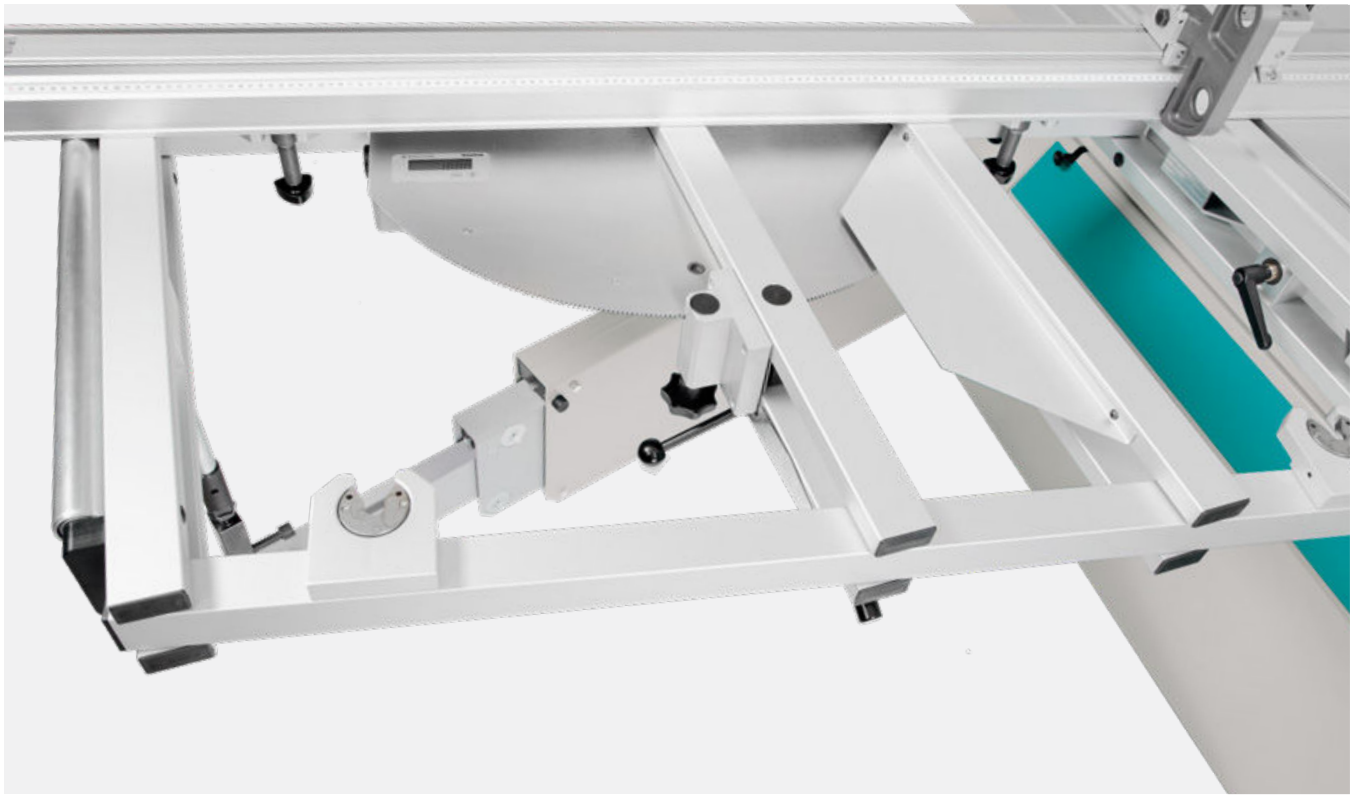

Fine adjustment, clamping mechanism and digital display of mitre cross-cut table | Txx65

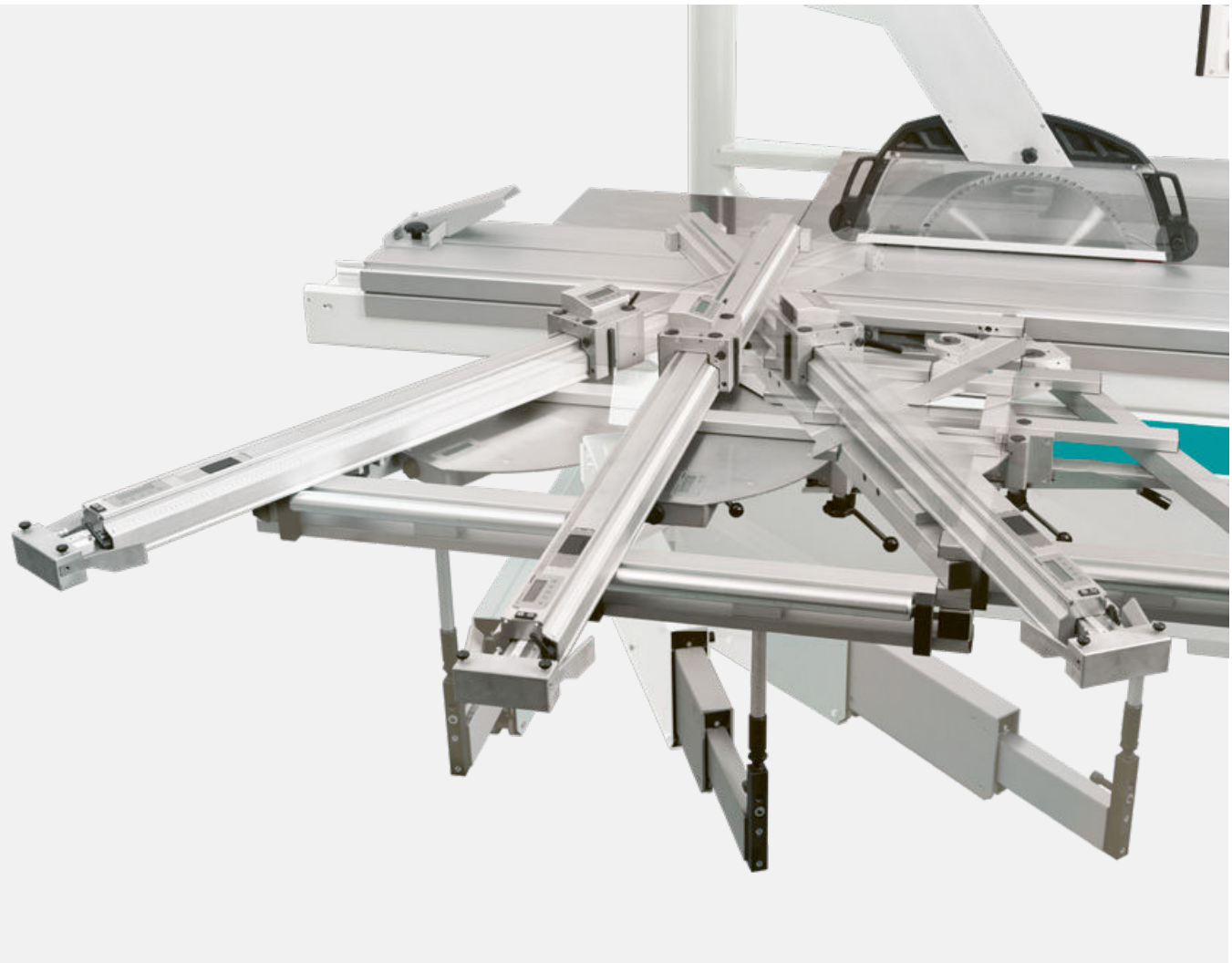

Mitre cross-cut table | Txx65

Cross-cut fences

Fine adjustment is regarded by experienced woodworkers as an indispensable quality feature of a good cross-cut fence. The cutting dimension often only has to be altered by just a very slight amount which is almost impossible without fine adjustment. So it's a good thing that MARTIN sliding table saws are equipped as standard with both stop elements of the cross-cut fence together with fine adjustment and a magnifier. Another standout feature of the cross-cut fence is the impressively smooth operation of its fence carriages. Both stop elements run on high-quality linear bearings made of wear-resistant high-performance polymer and can be used over the entire length of the fence jaw. The cross-cut fence can be easily pushed into the front or rear position of the cross-cut table with no need for lifting.

As an option, you can also equip your sliding table saw with the tried and tested MARTIN Premium 2-point cross-cut fence so that the workpiece does not rest on the full surface but is aligned at two points. Only in this way can slightly convex cuts, perhaps caused by stress in the panel, also be precisely cut at an angle. Therefore, this version is ideal for users who work a lot with panel material.

Optionally, you can also equip the machine with a premium cross-cut fence with a continuous support. With this model, the workpiece lies conventionally on the fence across its full length. Ideal if you work frequently with thin, flexible material, for example. The cut material is straightened by pressure on the fence and therefore cut at an exact angle.

Thanks to the magnifier, the precise scale is easy to read. And together with the standard fine adjustment function for the inner stop element, cutting lengths can be set quickly and extremely accurately on both stop versions.

Premium cross-cut fence in a digital version

If you attach importance to the highest level of dimensional accuracy at the cross-cut fence, you have the option of choosing a premium cross-cut fence with a digital design. Here, too, you can choose between two variants of the workpiece system. The inner and outer stop elements work with separate measuring devices and so can be set independently of each other with an accuracy of a tenth of a millimetre. Each display can also be switched to display relative dimensions, for example, for quick chain dimension cuts.

Additional stop elements are also available for all cross-cut fences. In this way, several measurements can be set and the work accelerated.

With the 4th axis, the motorised cross-cut fence for the T77, you can make rectangular cuts quickly and precisely to the left of the saw blade. Because, in addition to the cutting height, angle and width, the cutting length is also integrated into the control system. You specify the required length and width dimensions, and the control system positions the saw blade and fences.

Cross-cut fence	T66	T77
Standard cross-cut fence with continuous support	T6670 | standard	T7770 | standard
Additional stop element	T6670/10	T7770/10
Premium cross-cut fence with 2-point support, analogue	T6672/1	T7772/1
Additional analogue 2-point stop element	T6672/10	T7772/10
Premium cross-cut fence with 2-point support, digital	T6672/2	T7772/2
Additional digital 2-point stop element	T6672/20	T7772/20
Premium cross-cut fence with continuous support, analogue	T6673/1	T7773/1
Additional analogue folding stop element	T6673/10	T7773/10
Premium cross-cut fence with continuous support, digital	T6673/2	T7773/2
Additional digital folding stop element	T6673/20	T7773/20
Controlled cross-cut fence (4th axis)	—	T7774

Cross-cut fence T66 | T77 | standard

Premium cross-cut fence, continuous, analogue | Txx73/1

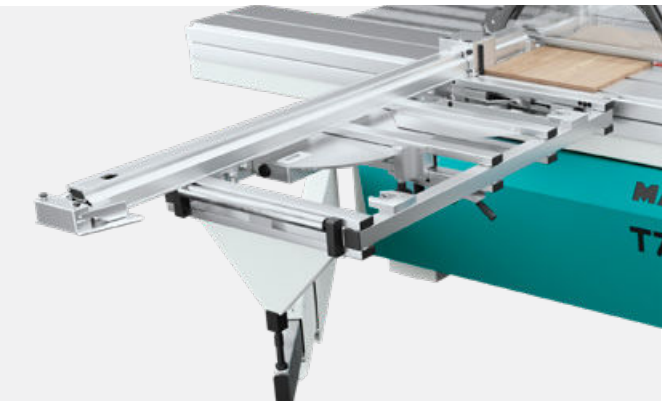

Premium cross-cut fence, 2-point, analogue | Txx72/1

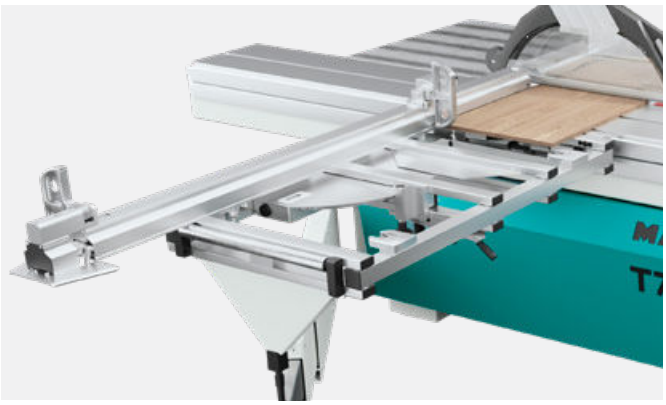

Premium cross-cut fence, continuous, digital | Txx73/2

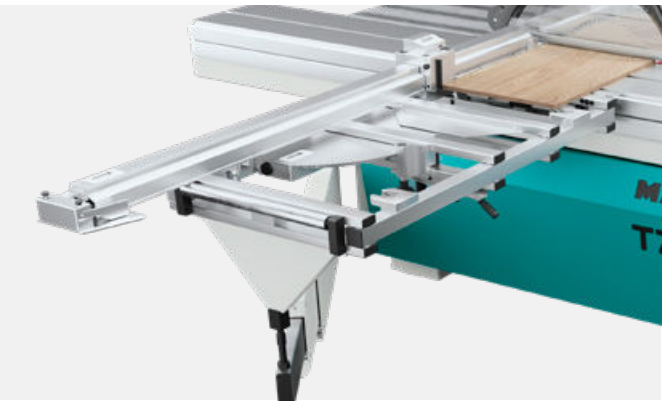

Premium cross-cut fence, 2-point, digital Txx72/2

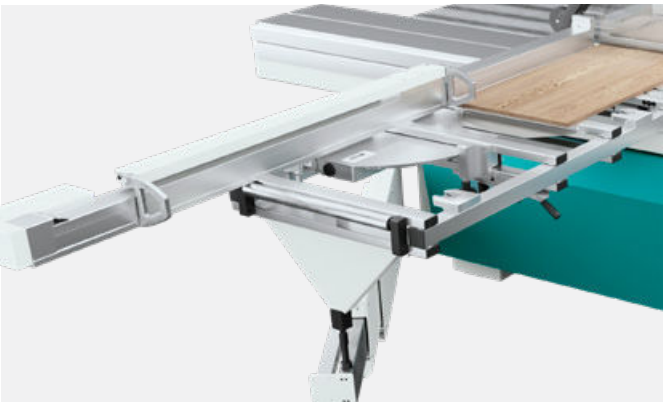

Controlled cross-cut fence (4th axis) | T7774

Angle cutting systems and mitre-cut fences

RadioCompens

RadioCompens extends the possibilities of the mitre cross-cut table to a considerable extent. Thanks to the wireless communication of the cross-cut table, control system and stop elements, time-consuming set-up times for angle cuts or mitre cuts are significantly reduced. The differences in length of the cross-cut fence caused by angular adjustments are compensated for exactly. In addition, even the cutting thicknesses of the respective saw blades used are taken into account. You simply adjust the table to the desired angle and the electronic cutting length indicators on the cross-cut fence immediately show you the corrected length dimension. The RadioCompens angle cutting system is optionally available with 2-point or continuous support.

Angle cutting system	T66	T77
RadioCompens with 2-point support	—	T7775/1
Additional 2-point stop element	—	T7775/10
RadioCompens with continuous support	—	T7775/2
Additional folding stop element	—	T7775/20
Control with continuous support	—	T7776

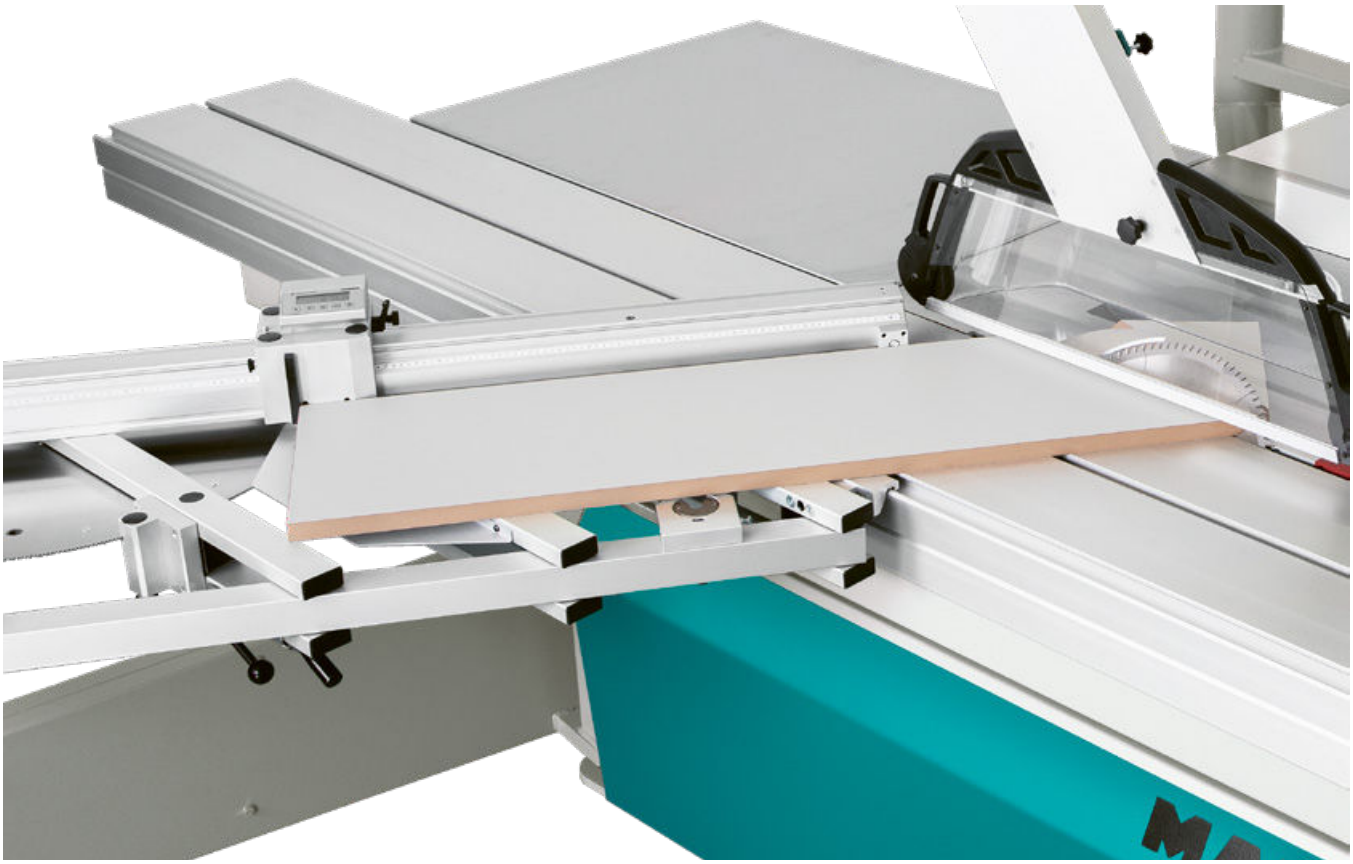

RadioCompens angle cutting system | T7775/1

Control

With the Control angle cutting system for the T77 model, the cutting length and table angle are fully integrated into the control system in addition to the cutting height, angle and width. You specify the required length and width dimensions, and the control system positions the saw blade and fences. The length compensation required for angle cuts or mitre cuts is fully automated. Connected to the control system via radio, the mitre cross-cut table delivers the angle data directly to the control system. The length compensation for cutting lengths of up to 3,300 mm takes place dynamically while you set the table. So your T77 becomes a genuine angle cutting centre.

The system control is always supplied with an extendable support, the stop can only be mounted in the rear position.

Control angle cutting system | T7776

MitreX

The MitreX double mitre fence is characterised by high setting precision thanks to a large angle scale, and the mitres can be cut from two sides. Apart from a precise mitre cut, an exact length on the workpiece is also required in most application cases. For that reason, length compensation is also provided for ten preferred angles between 0° and 67.5°. The fences can be used on alternating sides and enable cutting lengths from 90 to 1,375 mm. A particular advantage of the MitreX is the unique tear-out prevention block. If you value the highest angular precision, a digital variety of the MitreX is also available.

MitreX	T66	T77
With analogue angle display	T6679/1	T7779/1
With digital angle display	T6679/2	T7779/2

MitreX with analogue angle display | Txx79/1

MitreX with digital angle display | Txx79/2

Table extensions and supports

Numerous options are available to increase the support of your workpiece on your machine.

Table extension

Both models, T66 and T77 are already equipped as standard with a large, stable rear table extension, and provide first-class support for large workpieces after cutting. The robust base is designed for heavy-duty use, so that even heavy, bulky workpieces are supported safely and reliably. For the T77, a support that is almost twice as long is also available as an option, so that even the largest workpieces can be safely guided and supported. This extension can also be retrofitted.

Front support table

When cutting longer, narrower workpieces, the foldable front support table offers optimum support. The table helps you safely guide the workpiece on the rip fence.

Second support

The second support is quickly and easily attached to the side of the sliding table and simplifies the cutting of larger boards to a considerable extent.

Rip fence for second support

With this option added, the second support becomes a rip fence that perfectly supports you when making parallel cuts.

Table extensions and supports	T66	T77
Table extension	T6680/1 | standard	T7780/1 | standard
Table extension, long	—	T7780/2
Front support table, foldable	T6681/1	T7781/1
Second support	T6682	T7782
Rip fence for second support	T6682/1	T7782/1

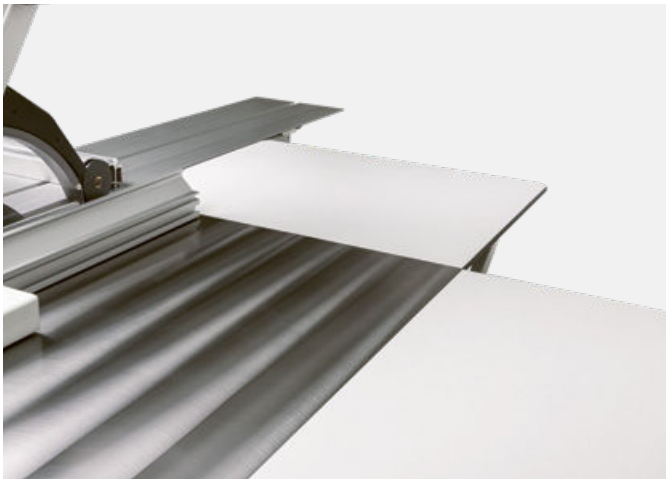

Table extension, rear | Txx80/ 1

Front support table | Txx81/1

Second support | Txx82

Rip fence for second support | Txx82/ 1

Clamping systems

Eccentric and pneumatic clamps

In order to be able to clamp workpieces easily and quickly, two clamps are available to you. It's up to you to choose whether to clamp by hand, eccentrically, or conveniently by radio. What's important is that your workpiece is clamped safely, and this is guaranteed in both versions.

Eccentric and pneumatic clamps	T66	T77
Eccentric clamp	T6685	T7785
Pneumatic clamp	T6686	T7786

Manual eccentric clamp | Txx85

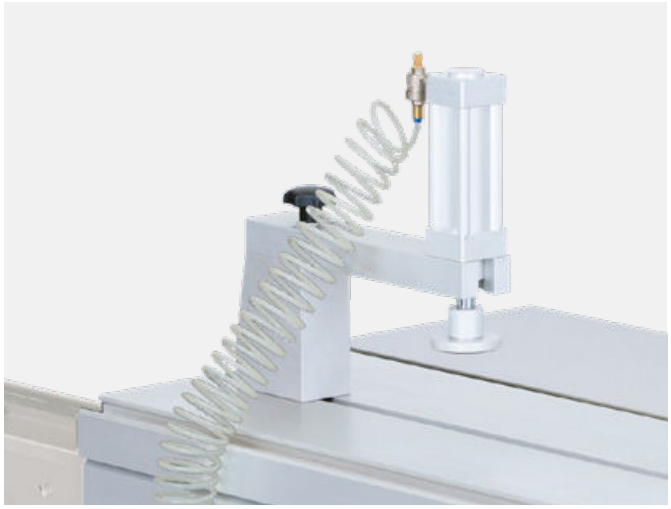

Pneumatic clamp | Txx86

VacuSlide: Vacuum workpiece clamping

A safe and evenly clamped workpiece is essential for a good cut. With the VacuSlide workpiece clamping system, it's easy to safely clamp and cut full-surface workpieces made of wood, plastic or non-ferrous metals. Even narrow workpieces are safely clamped by the clever arrangement of the suction zones. For exact workpiece positioning, the VacuSlide can also be used with the cross-cut fence. Even angle cuts or mitre cuts are possible at any time. For this, any suction areas that are not required are simply not occupied. The intelligent system detects this non-occupancy and switches the areas off accordingly. This ensures quick and intuitive operation. The activation of the VacuSlide workpiece clamping system is very easy. Activate the clamping function by remote control, lay the workpiece on the sliding table – and you're ready to go. To release the workpiece again, give the command via remote control – quickly and easily.

VacuSlide for sliding table in m	T66	T77
3.0 | each with 6 suction zones in two rows	—	T7787/3
3.3 | each with 7 suction zones in two rows	—	T7787/4
3.7 | each with 8 suction zones in two rows	—	T7787/5

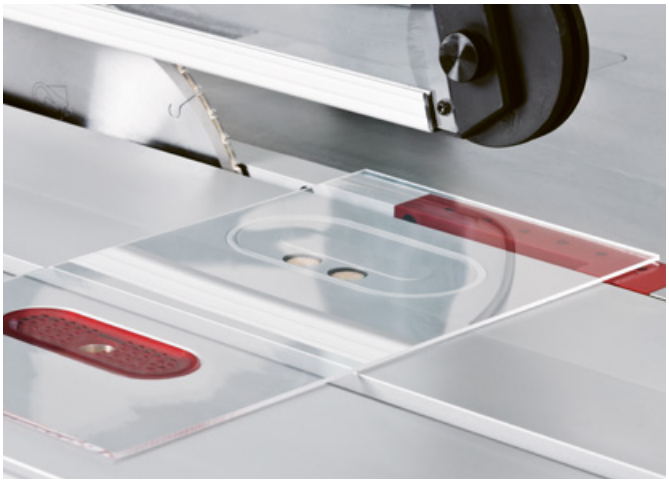

VacuSlide

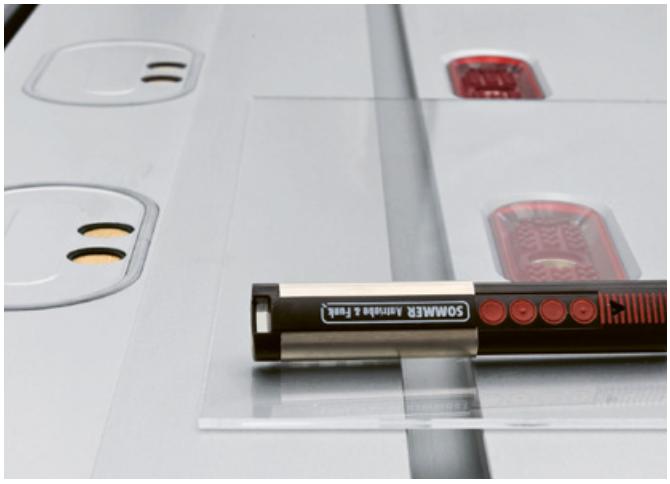

VacuSlide

Convenience devices

Guard sensor monitoring 1x 45°

To prevent the guard from getting damaged, you can opt for a sensor-monitored guard on the T77. This reliably prevents the saw blade from tilting into the guard unintentionally; tilting is only possible when the bulbous cover is fitted.

Guard sensor monitoring 2x 45°

To cover the full tilting range of the saw blade, on T77 machines that can be tilted to both sides, not only can the right-hand disk of the cover be replaced, but you can also move the entire cover to the left. In order to prevent the guard from getting damaged, we recommend that you use a sensor-monitored guard on the T77 which monitors both the type of disk currently inserted and the lateral position of the hood. This prevents the saw blade from accidentally tilting into the guard.

SafeMove motorised guard

The SafeMove motorised guard offers you the highest level of convenience and optimum safety on T77 machines that can be tilted to both sides. The guard is moved dynamically to the left – depending on the projection and tilting angle of the saw blade. Therefore, the guard only ever takes up as much space as the current situation requires. Of course, the type of disk currently in use is also monitored. This prevents the saw blade from accidentally damaging the guard.

Sliding table on/off switch

Thanks to the on/off switch on the sliding table, you can start and stop the machine conveniently without having to walk long distances. Large panels, for example, can be positioned first, and the machine can then be switched on remotely.

Convenience devices	T66	T77
Guard sensor monitoring 1 × 45°	—	T7792/1
Guard sensor monitoring 2 × 45°	—	T7792/2
Motorised guard 2 × 45°	—	T7792/3
Sliding table on/off switch	T6693	T7793

Clamping and stop system

The clamping and stop system is an effective work protection device for every sliding table saw. It can be mounted in no time at all without tools and offers you a high degree of safety when cutting workpieces. When cutting diagonal, short, narrow or wedge-shaped workpieces of different sizes, you always work quickly, comfortably and safely. The sets differ in their number of clamps and stops.

Pivoting clamp in use

Pivoting clamp in use

Clamping and stop system	T66	T77
Clamping and stop system Standard	T6689/1	T7789/1
Clamping and stop system Comfort	T6689/2	T7789/2

Special accessories

Edging device

The cutting of veneered or laminated boards is just one of the edging device's areas of application. The edging device is simply pushed onto the fence jaw and can be used more or less instead of a laser, and also for cutting according to scribe marks.

Laser cutting line display

The laser beam shows you the exact course of the saw cut, which is especially helpful when edging and straight-lining solid wood. The cutting of stair treads according to scribe marks is just one of many classical areas of application of this accessory.

Spraying device

This system, which is designed as a minimum quantity cooling lubrication device, enables you to cool or lubricate your cuts in aluminium, other non-ferrous metals or plastics, either selectively or over small areas. The saw blade is wet directly with the medium, and cooled or lubricated – for clean, accurate cuts.

Pneumatic pressure bar in m	T66	T77
Edging device	T6695	T7795
Laser cutting line display	T6696	T7796
Minimum quantity cooling lubrication device	T6697	T7797
Electrical equipment for connection to RCCB 30 mA	T6698	T7798

Edging device | Txx95

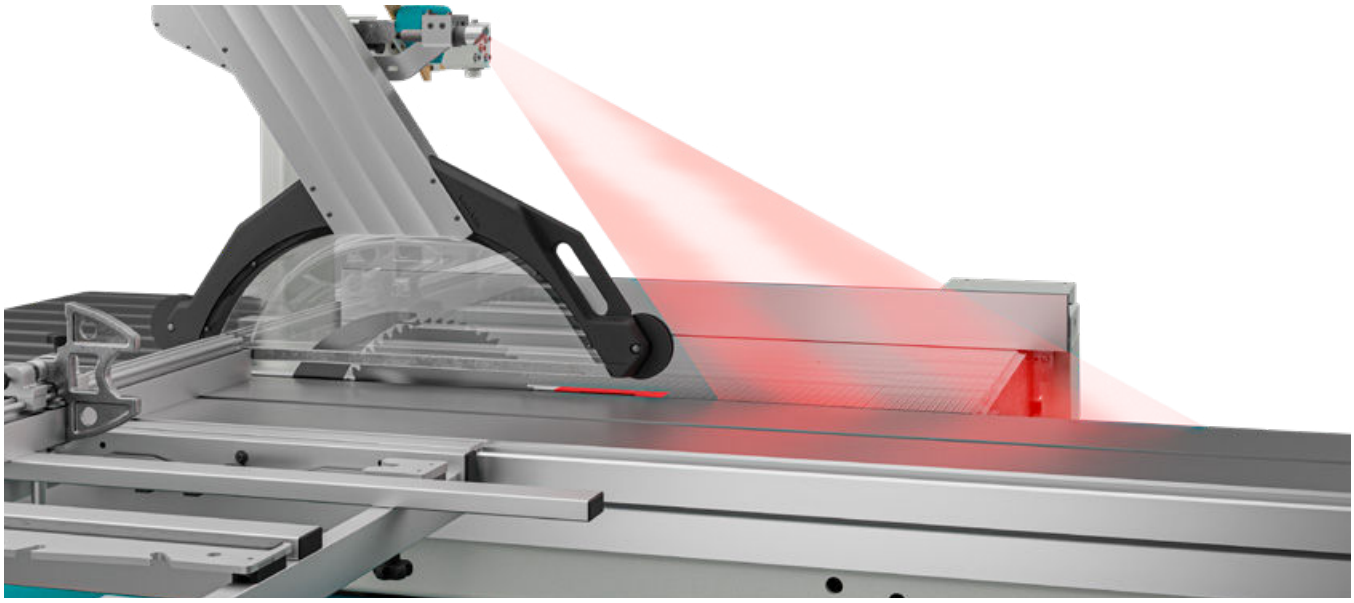

Laser cutting line display | Txx96

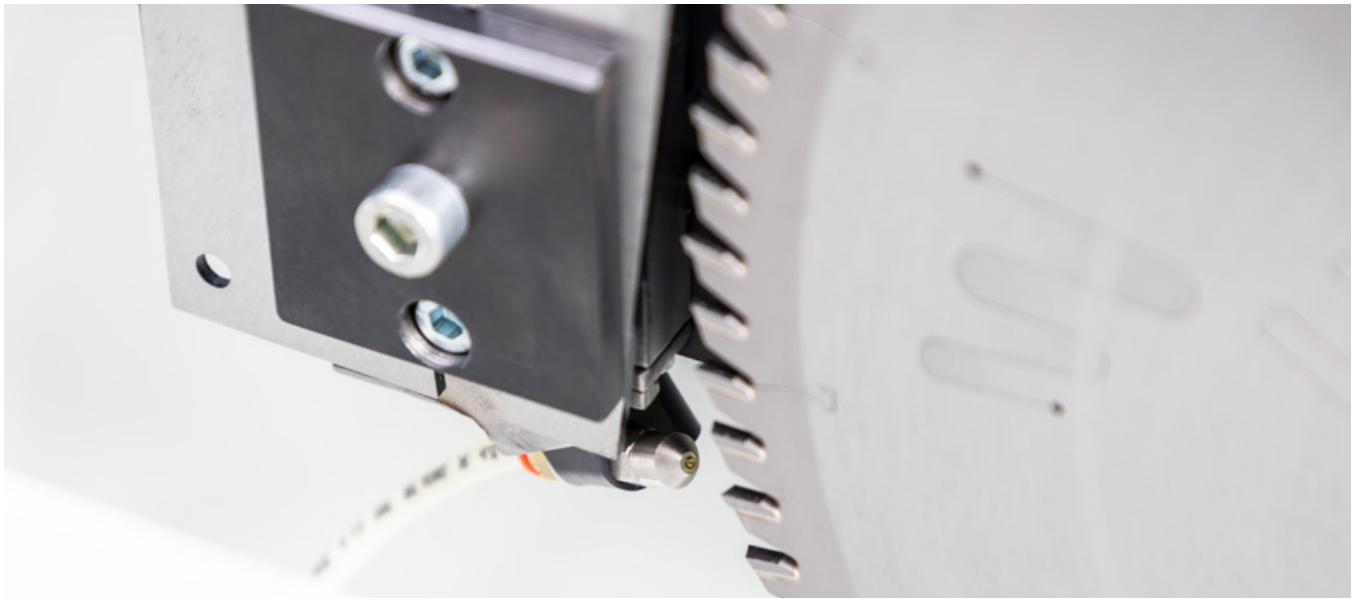

Minimum quantity cooling lubrication device | Txx97

T66 sliding table saw

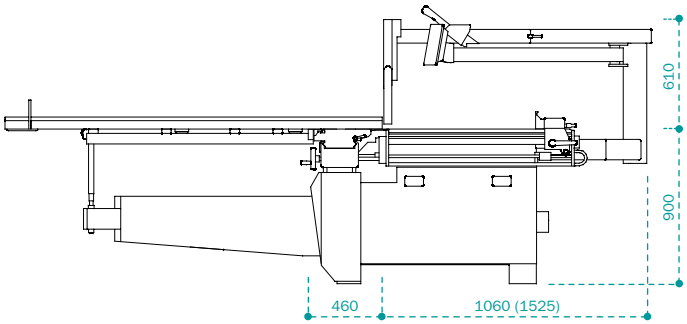

T66 | Side view

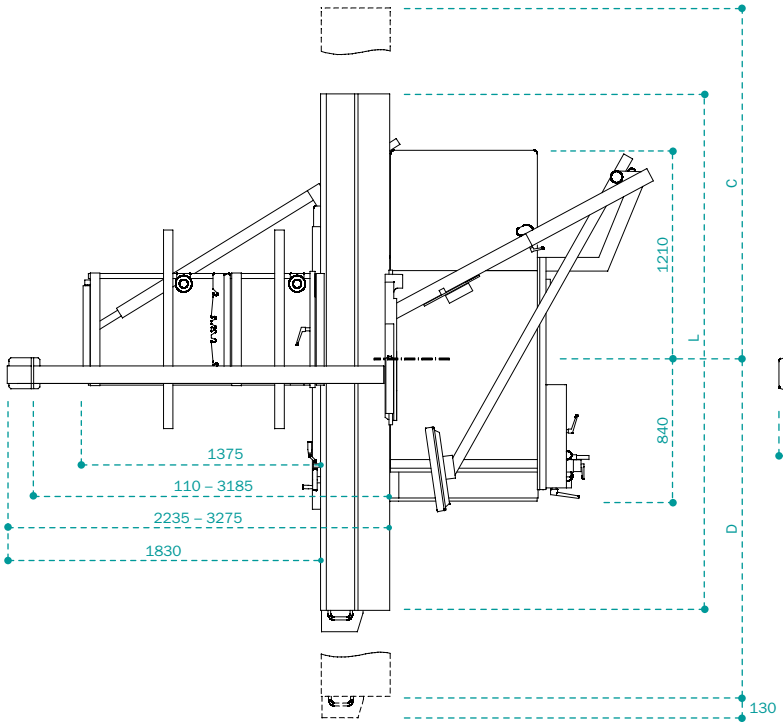

T66 | Plan view

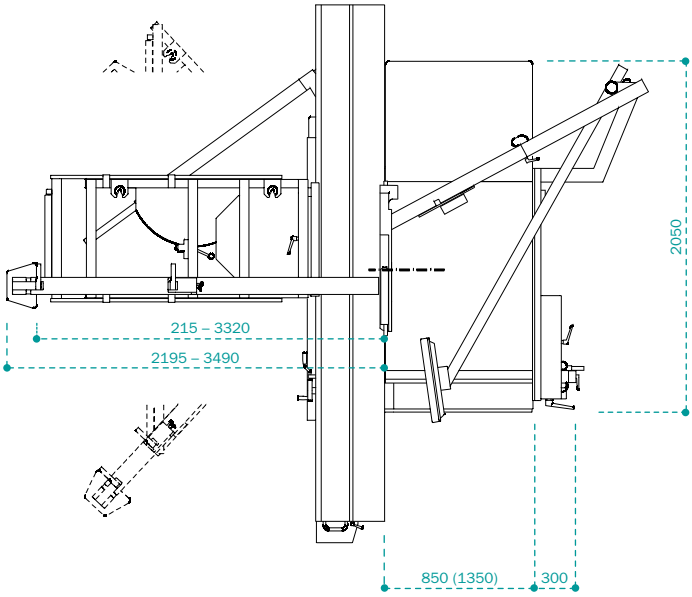

T66 | Plan view

A Cutting width	**L** Sliding-table length	Format cut	**C | D** Movement range
850	1,900	1,900 × 1,900	2,370 | 2,910
1,350	3,000	3,000 × 3,000	3,470 | 3,410
	3,300	3,300 × 3,300	3,770 | 3,710
	3,700	3,310 × 3,700	4,170 | 4,110

Dimensions and specifications are subject to technical innovation and may change without prior notice. Illustrations may differ from the original.

Please refer to the valid price list for binding technical features and equipment.

T77 sliding table saw

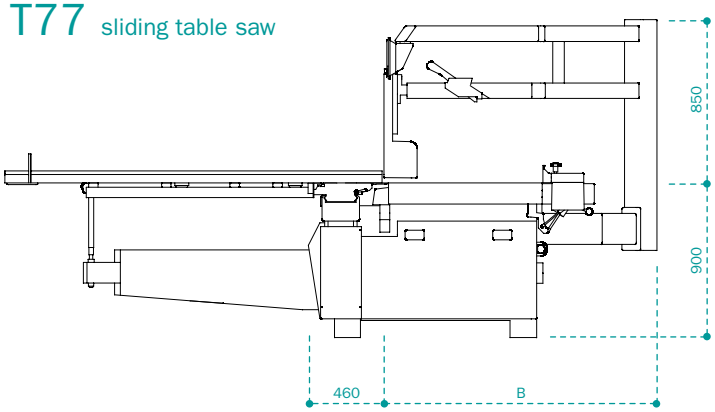

T77 | Side view

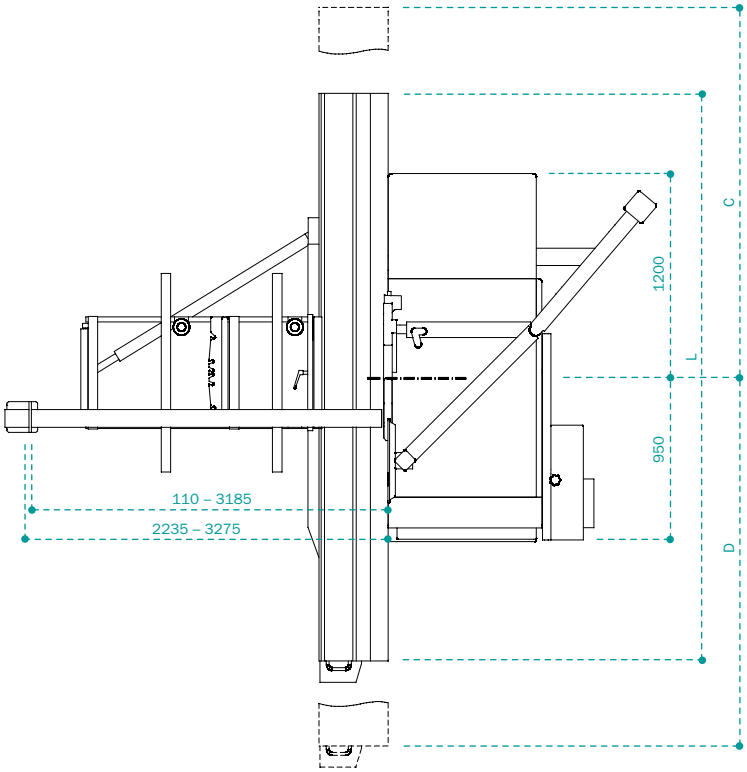

T77 | Plan view

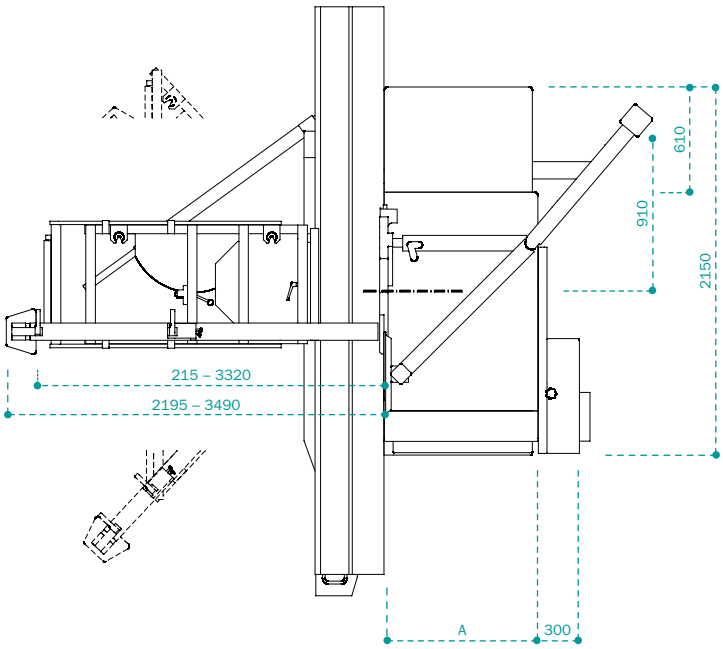

T77 | Plan view

A Cutting width	**B**	**L** Sliding-table length	Format cut	**C | D** Movement range
850	1.270	1.900	1.900 × 1.900	2.370 | 2.910
1.100	1.270	2.500	2.500 × 2.500	2.970 | 2.910
1.350	1.550	3.000	3.000 × 3.000	3.470 | 3.410
1.600	1.800	3.300	3.300 × 3.300	3.770 | 3.710
		3.700	3.310 × 3.700	4.170 | 4.110
		4.300	3.310 × 3.700	4.770 | 4.710

The machines are “wood dust tested” according to DGUV 209-044 / BGI 739-1.

All dimensions provided in millimetres. Made in Germany.

Otto Martin Maschinenbau GmbH & Co. KG Langenberger Str. 6, 87724 Ottobeuren/Germany **T** +49 (0) 8332 911 - 0 www.martin.info sales@martin.info
MARTIN Woodworking Machines Corp. 8715 Sidney Circle, Ste. 100, Charlotte, NC 28269/USA **T** (704) 921 0360 www.martin-usa.com info@martin-usa.com

Visit us:

Website

Facebook

Instagram

YouTube

Broshure

Contact us at
+49 (0) 8332 911 - 0
sales@martin.info

MARTIN

www.martin.info

02/2022

Otto Martin Maschinenbau GmbH & Co. KG Langenberger Str. 6, 87724 Ottobeuren/Germany **T** +49 (0) 8332 911 - 0 www.martin.info sales@martin.info
MARTIN Woodworking Machines Corp. 8715 Sidney Circle, Ste. 100, Charlotte, NC 28269/USA **T** (704) 921 0360 www.martin-usa.com info@martin-usa.com

Visit us:

Website

Facebook

Instagram

YouTube

Broshure

Contact us at
+49 (0) 8332 911 - 0
sales@martin.info

MARTIN

www.martin.info

02/2022

Sawing

MARTIN

Turning vague ideas
into precise cuts

ConnectControl
Technology

The MARTIN sliding table saw – the centrepiece of every workshop.

Are you one of those professionals who not only loves wood as a material, but also the absolute precision with which it can be processed? It is precisely for people like you who place such a special demand on their craft that we build innovative and absolutely reliable sliding table saws. So that they can turn their vision into reality. With millimetre precision.

In addition to the high-quality basic equipment, MARTIN sliding table saws also offer numerous useful and partly patented options.

You can conveniently configure your MARTIN sliding table saw according to your individual needs online at **www.martin.info**

Specifications	6
T66	8
T77	10
ConnectControl	12
T66 | T77 options	30
Dimensional sketches	54

T77 sliding table saw

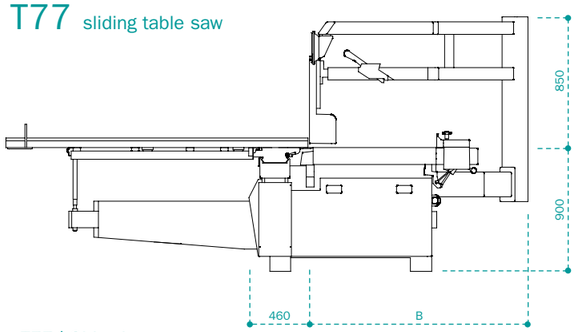

T77 | Side view

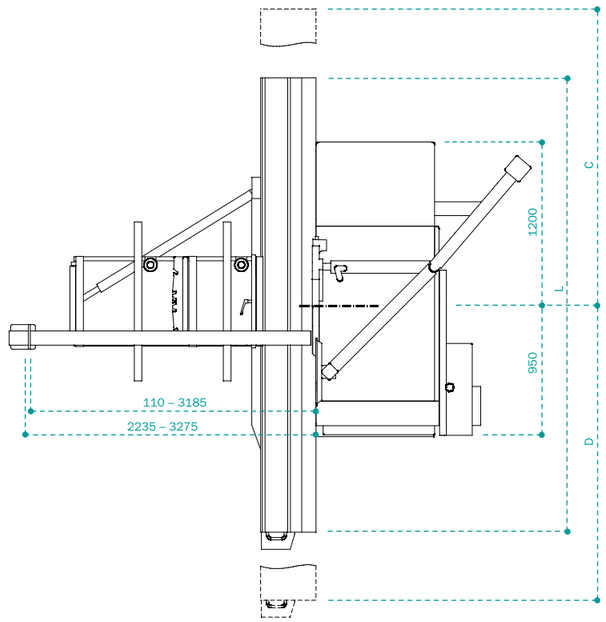

T77 | Plan view

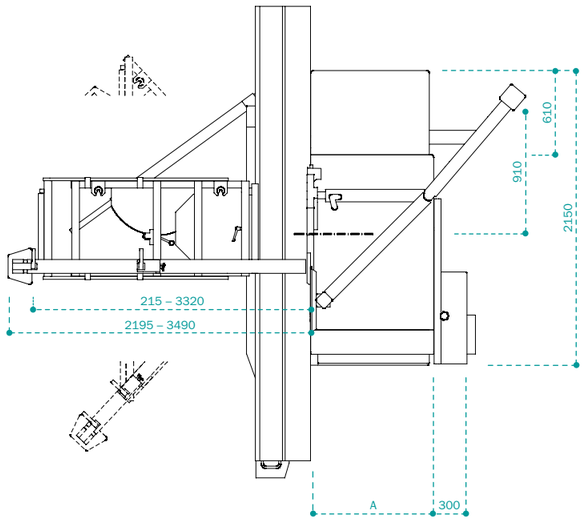

T77 | Plan view

A Cutting width	**B**	**L** Sliding-table length	Format cut	**C | D** Movement range
850	1.270	1.900	1.900 × 1.900	2.370 | 2.910
1.100	1.270	2.500	2.500 × 2.500	2.970 | 2.910
1.350	1.550	3.000	3.000 × 3.000	3.470 | 3.410
1.600	1.800	3.300	3.300 × 3.300	3.770 | 3.710
		3.700	3.310 × 3.700	4.170 | 4.110
		4.300	3.310 × 3.700	4.770 | 4.710

The machines are “wood dust tested” according to DGUV 209-044 / BGI 739-1.

All dimensions provided in millimetres. Made in Germany.